LEGEND

- FACTORY WIRING.
- CONTRACTOR FIELD WIRING.
- SIGNAL DIRECTION
- S.G.C. SWITCHGEAR CABINET

GEN-SET NOTES

1. ABSOLUTELY NO SUBSTITUTIONS ALLOWED ON BELDEN CABLE #8760. CONTRACTOR WILL BE RESPONSIBLE FOR REPLACING CABLE THAT DOES NOT MEET THIS SPECIFICATION.
2. BELDEN CABLE #8760, IF INSTALLED UNDERGROUND SHALL BE IN SEALTITE CONDUIT ONLY. CONTRACTOR WILL BE RESPONSIBLE FOR REPLACING CABLE THAT DOES NOT MEET THIS SPECIFICATION.
3. CAT6 CABLE SHALL BE INSTALLED BETWEEN ALL MODBUS CONTROLLERS AND THE BMS NETWORK SWITCH. IF INSTALLED UNDERGROUND IT SHALL BE IN SEALTITE CONDUIT ONLY. CONTRACTOR WILL BE RESPONSIBLE FOR REPLACING CABLE THAT DOES NOT MEET THIS SPECIFICATION.
4. "TBC" THIS TERMINAL BOARD IS FACTORY INSTALLED IN THE BMS CABINET FOR HARD-WIRED MONITORING/CONTROL POINTS OF SPECIFIC EQUIPMENT.
5. THE FIELD-WIRED CONTACTORS OF THE COMBINATION FIRE PUMP CONTROLLER/AUTOMATIC TRANSFER SWITCH WILL BE TO THE CONTACTS AS SHOWN HERE FOR THE FIRETROL CONTROLLER. WHENEVER A FIRE PUMP IS REQUIRED. THESE POINTS SHALL BE COORDINATED AND IDENTIFIED IN OTHER BRANDS OF CONTROLLERS.

NOTE:
BMS PROVIDER SHALL PROVIDE IN THEIR "OWNER FURNISHED" PRICING TO LOWE'S, A PER PROJECT SYSTEM START UP PROCESS FOR EACH NEW BMS/SWITCHGEAR ORDER. A FACTORY AUTHORIZED SERVICE REPRESENTATIVE SHALL VERIFY AND/OR PERFORM THIS ON-SITE EQUIPMENT START UP PROCEDURE PRIOR TO THE COMMENCEMENT OF THE BUILDING COMMISSIONING. BMS SHALL BE SET UP TO PROPERLY COMMUNICATE WITH ALL OTHER EQUIPMENT CONTROLLERS. DURING BUILDING COMMISSIONING, ANY DEFICIENCIES OR CONNECTION ISSUES FOUND DUE TO THE CONTROLLER NOT PROGRAMMED OR INCORRECTLY PROGRAMMED, SHALL BE THE RESPONSIBILITY OF THE PROVIDER TO CORRECT AT NO ADDITIONAL EXPENSE TO LOWE'S.

- START UP/INITIAL TESTING, IP ADDRESS PROGRAMMING (**IP ADDRESS 10.21.9.201**), AND COMMUNICATION MODE PROGRAMMING

BREAKER "MGP" (TS1)

600 AMP SHUNT TRIP BREAKER

600 AMP BREAKER POSITION

GEN. SHUNT TRIP COIL (600 AMP BRK.)

THIS WIRING CONNECTS THE NORMALLY OPEN CONTACT TO MONITOR BREAKER POSITION. THE CONTACT CLOSES WHEN THE BREAKER IS OPEN.

T1 T2 COM A

TERMINAL BLOCK MOUNTED ON RIGHT SIDE OF "MGP" PANEL BEHIND FRONT COVER

T1 T2 40 39

#12 WHITE — PANEL CP1 NEUTRAL

#12 RED — FIRE PUMP CONT. 20A

WHITE BLACK

CABLE #4 FROM (TBC)

GENERATOR MODBUS CONNECTION

MONITORING/CONTROL POINTS

1. REMOTE ENGINE START SIGNAL - CONTROL
2. OVER SPEED GENERATOR - MONITOR
3. OVER CRANK GENERATOR - MONITOR
4. GENERATOR RUNNING - MONITOR
5. EMERGENCY STOP - MONITOR
6. HIGH COOLANT TEMPERATURE - MONITOR
7. LOW COOLANT TEMPERATURE - MONITOR
8. LOW COOLANT LEVEL - MONITOR
9. LOW OIL PRESSURE - MONITOR
10. GENERATOR NOT IN AUTO - MONITOR
11. LOW FUEL LEVEL - MONITOR
12. PERCENTAGE FUEL REMAINING - MONITOR
13. LOW BATTERY VOLTAGE - MONITOR
14. RUPTURED FUEL TANK - MONITOR

TO GEN-SET START SIGNAL CONNECTION

(2)#12 AWG THWN

ASCO 5101-GEN KIT TO BE FIELD INSTALLED BY THE ELECTRICAL CONTRACTOR.

CABLE #3 FROM BMS

TO GEN-SET START BATTERY VDC CONNECTION

(2)#12 AWG THWN TO GEN-SET START BATTERY VDC CONNECTION

70A ATS MODBUS CONNECTION

MONITORING/CONTROL POINTS

1. REMOTE ENGINE START SIGNAL - CONTROL
2. 'ELS' EMERGENCY SOURCE AVAILABLE - MONITOR
3. 'ELS' NORMAL SOURCE AVAILABLE - MONITOR
4. 'ELS' TRANSFER SWITCH IN EMERGENCY POSITION - MONITOR
5. 'ELS' TRANSFER SWITCH IN NORMAL POSITION - MONITOR

CABLE #2 FROM BMS

ASCO ACCESSORY 7ES

600A ATS MODBUS CONNECTION

MONITORING/CONTROL POINTS

1. REMOTE ENGINE START SIGNAL - CONTROL
2. 'MDPB' EMERGENCY SOURCE AVAILABLE - MONITOR
3. 'MDPB' NORMAL SOURCE AVAILABLE - MONITOR
4. 'MDPB' TRANSFER SWITCH IN EMERGENCY POSITION - MONITOR
5. 'MDPB' TRANSFER SWITCH IN NORMAL POSITION - MONITOR
6. 'BW' LOAD SHED - CONTROL THRU 'BW' CONTROL RELAY

CABLE #1 FROM BMS

ASCO ACCESSORY 7ES

GENERATOR MONITORING CONTROLLER TERMINAL BOARD (TBC)

CABLE #4 TO 600 AMP BREAKER MGP (TS1)

CONTACT A	BLACK	1	600 AMP BREAKER POSITION
COMMON	WHITE	2	COMMON #1
		3	BMS REMOTE START SIGNAL
		4	
		5	BMS DRY CONTACTS START SIGNAL INTEGRITY ALARM
		6	
SPARE		7	SPARE
SPARE		8	SPARE

(2) #12 AWG THWN IN 3/4" CONDUIT (TYPICAL)

CABLE #1 - CAT6 — CABLE #1 TO 600 ATS MODBUS CONTROLLER

CABLE #2 - CAT6 — CABLE #2 TO 70 ATS MODBUS CONTROLLER

CABLE #3 - CAT6 — CABLE #3 TO GENERATOR MODBUS CONTROLLER

INSTALL CABLE UNDERGROUND IN CONTINUOUS LENGTH OF LIQUIDTIGHT FLEXIBLE METAL CONDUIT - TYPICAL FOR ALL CABLES — CABLE #4 BELDEN 8760

CABLE #5 TO PM 8000 METER

(2) #12 AWG THWN IN 3/4" CONDUIT

NOTE:
CABLES #1 THROUGH #5 SHALL BE IN 1" CONDUIT.

FIREPUMP CONTACTS

#12 WHITE — #12 RED — (2) #12 AWG THWN IN 3/4" CONDUIT (TYPICAL)

FIRE PUMP

#12 RED — FROM PANEL CP1 BKR. 21

113 112

#12 WHITE — FROM CP1 NEUTRAL BUS

ASCO 5101-ATS KIT TO BE FIELD INSTALLED BY THE ELECTRICAL CONTRACTOR.

FIRE PUMP START SIGNAL

70 71

#12 CONDUCTOR THWN

#12 CONDUCTOR THWN

1" CONDUIT TO FIREPUMP CONTROLLER

PANEL MDPA

SCHNEIDER ELECTRIC PM 8000 METER

CABLE #5 - CAT6

GENERATOR/TRANSFER-SWITCH/UPS CONTROL AND MONITORING KEY PLAN

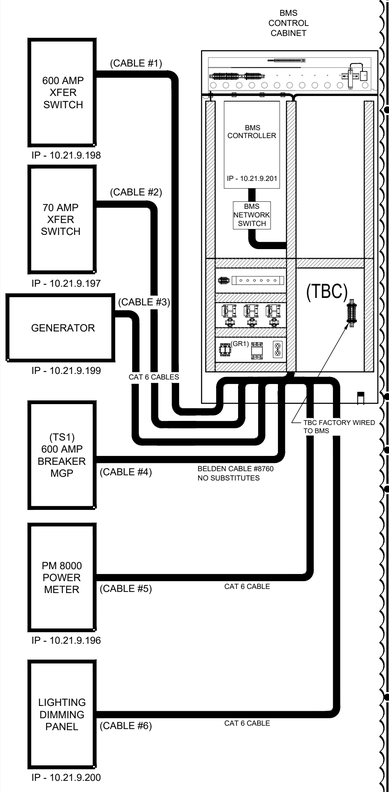

REVISIONS

◇ PRE-BID SET ISSUE DATE △ POST BID SET ISSUE DATE

DATE		DESCRIPTION
10.07.2026	1	CRITERIA UPDATES

Carl Page — Digitally signed by Carl Page — No. 0053205 — STATE OF FLORIDA — PROFESSIONAL ENGINEER — 10.05.2025

PAGE
INTERWORKS, P.A.
ENGINEERS & CONSULTANTS
7223 MAIN STREET, NORTH WILKESBORO, NC 28659
PHONE: 336-667-4225

LICENSE:
NCARB No. C-44575
NEW JERSEY Lic. No. 12114
NEW YORK Lic. No. 0224575-1
FLORIDA Lic. No. 94-0000
Lic. No. RA-0019010-B
VIRGINIA Lic. No. 0402 019655
FLORIDA AR95156
Lic. No.

PERRY M. PETRILLO ARCHITECTS PC
9 Park Avenue
Park Ridge, New Jersey 07656
Telephone (201) 307-6153
Facsimile (201) 307-6158

LOWE'S HOME CENTERS, LLC
1000 LOWE'S BOULEVARD
MOORESVILLE, NC 28117
704.758.1000 (PH.)

THIS DRAWING IS THE PROPERTY OF LOWE'S HOME CENTERS, LLC. ANY USE OR REPRODUCTION IN WHOLE OR PART IS PROHIBITED WITHOUT THE EXPRESSED WRITTEN CONSENT OF LOWE'S HOME CENTERS, LLC.
COPYRIGHT 2025-2027 ALL RIGHTS RESERVED

LOWE'S

GEN-SET CONTROL WIRING SCHEMATIC AND NOTES

LOWE'S OF WESTLAKE
5683 SEMINOLE PRATT WHITNEY RD.
Westlake, Florida, 33470

PCN: 77-40-43-01-29-000-0010
PROJECT No: 24209 | DRAWN BY: JBM | CHECKED BY: CARP

CRITERIA ISSUE DATE:	02-2025
PERMIT SET ISSUE DATE:	08-22-2025
CONSTRUCTION SET ISSUE DATE:	04-14-2025
DRAWING NUMBER:	E7.01

ORIGINAL	SECOND	FINAL

GEN-SET CONTROL WIRING SCHEMATIC — 01 — SCALE: NTS