

15 ADA STALL ELEVATION
SCALE: 3/8"=1'-0" REFER: A-4.1

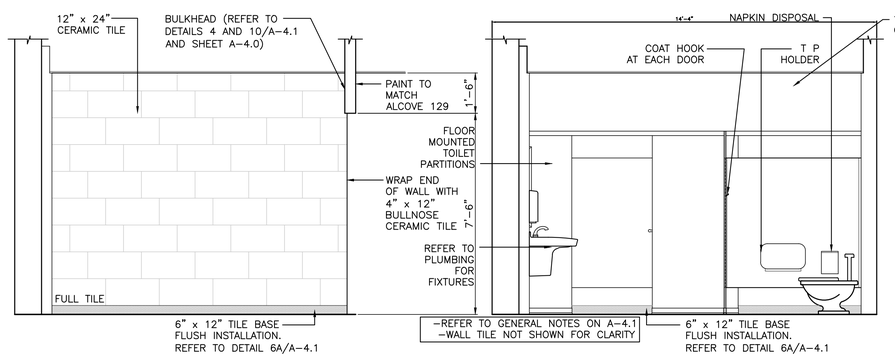

14 TOILET ELEVATION
SCALE: 3/8"=1'-0" REFER: A-4.1

11 WOMEN'S TOILET ELEVATION
SCALE: 3/8"=1'-0" REFER: A-4.1

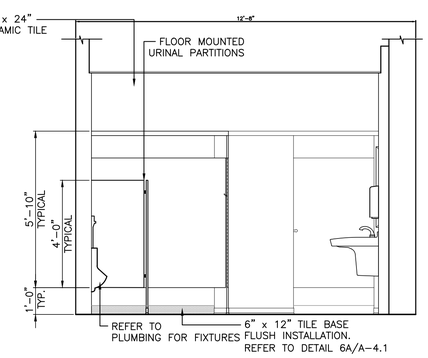

7 MEN'S TOILET ELEVATION
SCALE: 3/8"=1'-0" REFER: A-4.1

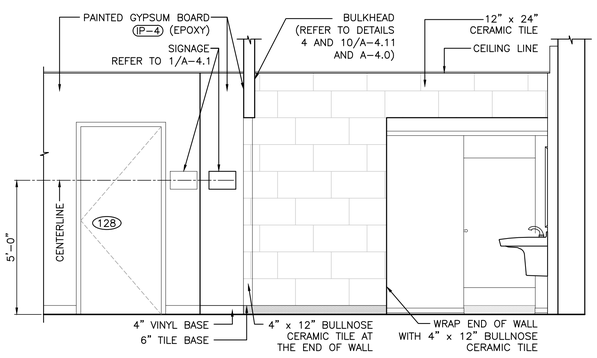

5 TOILET ELEVATION
SCALE: 3/8"=1'-0" REFER: A-4.1

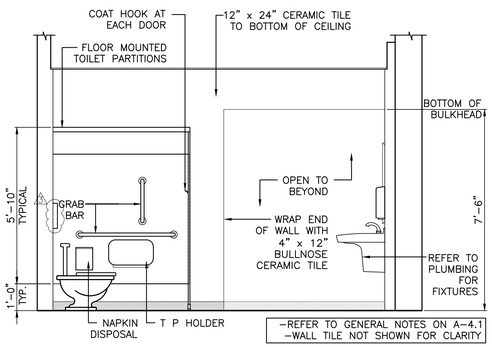

13 WOMEN'S TOILET ELEVATION
SCALE: 3/8"=1'-0" REFER: A-4.1

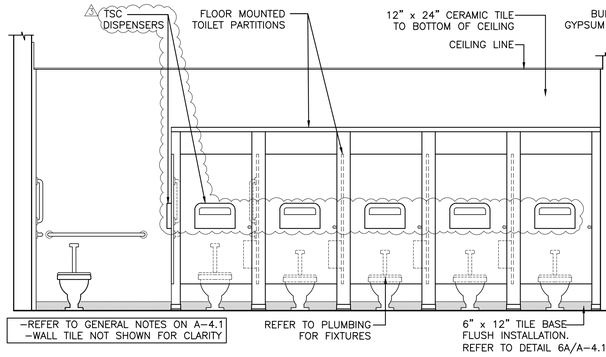

4 WOMEN'S TOILET ELEVATION
SCALE: 3/8"=1'-0" REFER: A-4.1

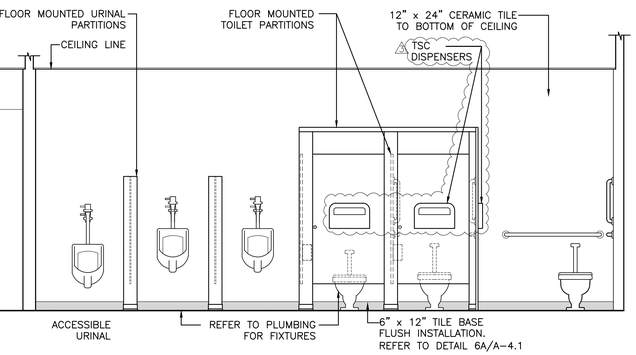

10 MEN'S TOILET ELEVATION
SCALE: 3/8"=1'-0" REFER: A-4.1

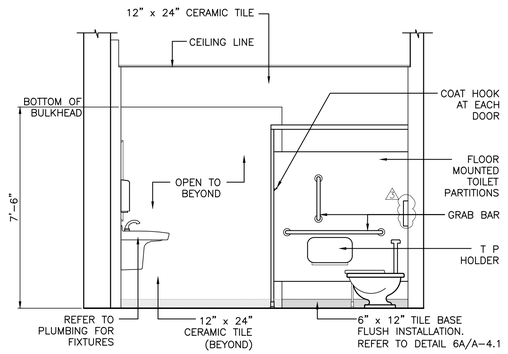

12 MEN'S TOILET ELEVATION
SCALE: 3/8"=1'-0" REFER: A-4.1

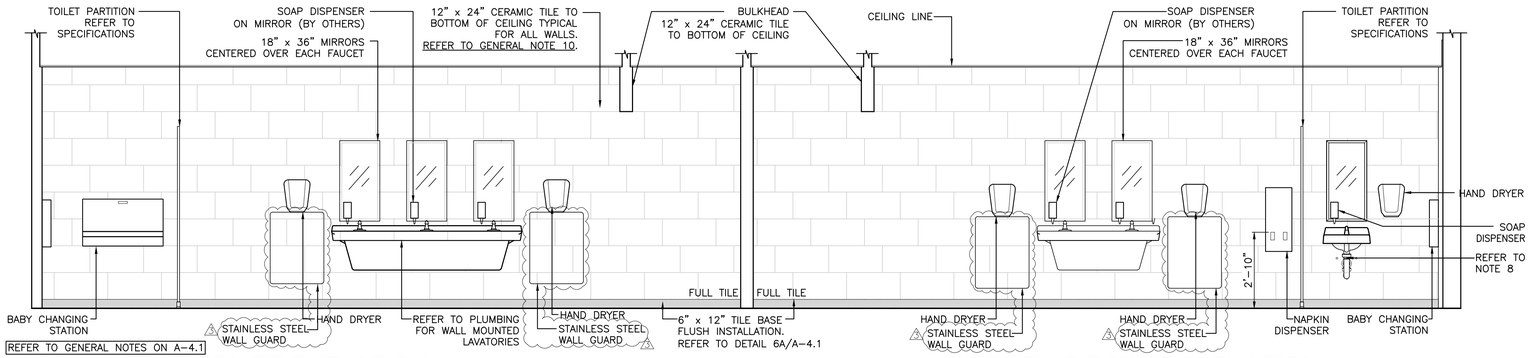

3 MEN'S TOILET ELEVATION
SCALE: 3/8"=1'-0" REFER: A-4.1

9 WOMEN'S TOILET ELEVATION
SCALE: 3/8"=1'-0" REFER: A-4.1

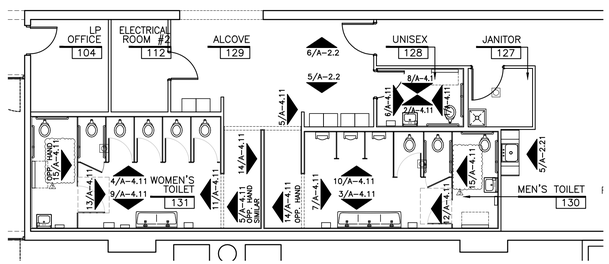

KEY PLAN
SCALE: N.T.S.

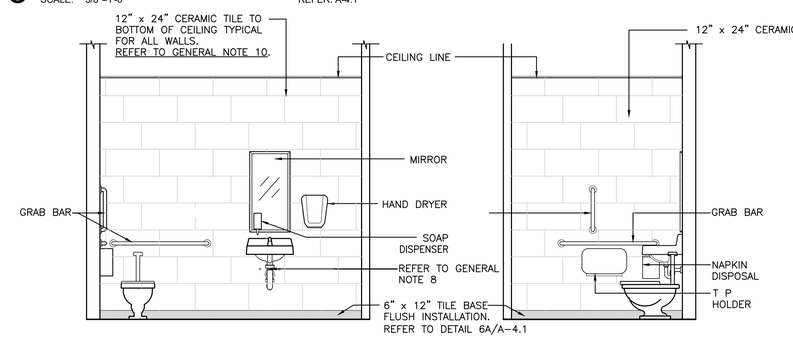

8 UNISEX TOILET ELEVATION
SCALE: 3/8"=1'-0" REFER: A-4.1

6 UNISEX TOILET ELEVATION
SCALE: 3/8"=1'-0" REFER: A-4.1

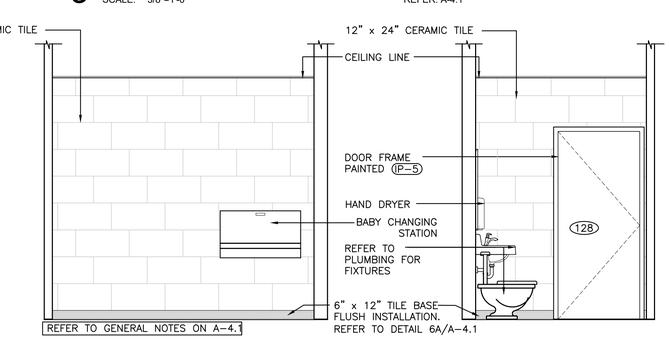

2 UNISEX TOILET ELEVATION
SCALE: 3/8"=1'-0" REFER: A-4.1

1 UNISEX TOILET ELEVATION
SCALE: 3/8"=1'-0" REFER: A-4.1

FINAL / SECOND / ORIGINAL

REVISIONS
◇ PRE-BID SET ISSUE DATE △ POST BID SET ISSUE DATE

DATE	DESCRIPTION
07.24.25	◇ Criteria Updates
10.07.26	△ Criteria Updates

STATE OF FLORIDA REGISTERED ARCHITECT PERRY M. PETRILLO AR95158

LICENSE:
NCARB Cert. No. 44-575
NEW JERSEY Lic. No. 12119
NEW YORK Lic. No. 024375-1
PENNSYLVANIA Lic. No. RA-015310-B
VIRGINIA Lic. No. 0401 011655
FLORIDA Lic. No. AR95158

PERRY M. PETRILLO ARCHITECTS PC
9 Park Avenue
Park Ridge, New Jersey (07656
Telephone (201) 307-6153
Facsimile (201) 307-6158

LOWE'S HOME CENTERS, LLC
1000 LOWE'S BOULEVARD
MOORESVILLE, NC 28117
704.758.1000 (PH.)

THIS DRAWING IS THE PROPERTY OF LOWE'S HOME CENTERS, LLC. ANY USE OR REPRODUCTION IN WHOLE OR PART IS PROHIBITED WITHOUT THE EXPRESSED WRITTEN CONSENT OF LOWE'S HOME CENTERS, LLC. ©COPYRIGHT 2025-2027 ALL RIGHTS RESERVED

LOWE'S®

RESTROOM ELEVATIONS
LOWE'S OF WESTLAKE
5683 SEMINOLE PRATT WHITNEY RD.
Westlake, Florida, 33470
PCN: 77-45-43-13-24-000-0010
PROJECT No: 23.200 DRAWN BY: LOM CHECKED BY:

CRITERIA
ISSUE DATE: 02-2025
PERMIT SET
ISSUE DATE: 08-22-2025
CONSTRUCTION SET
ISSUE DATE: 04-14-2025
DRAWING NUMBER:
A-4.11