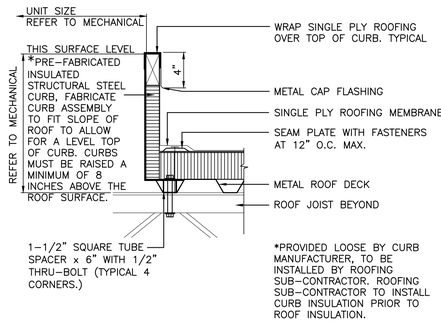

4 TYPICAL HVAC EQUIPMENT CURB SECTION

SCALE: 1 1/2" = 1'-0" REFER: A-1.1

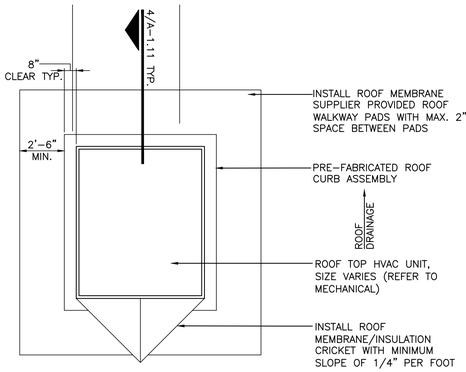

3 ROOF WALKWAY PAD LAYOUT

SCALE: 1/4" = 1'-0" REFER: A-1.1

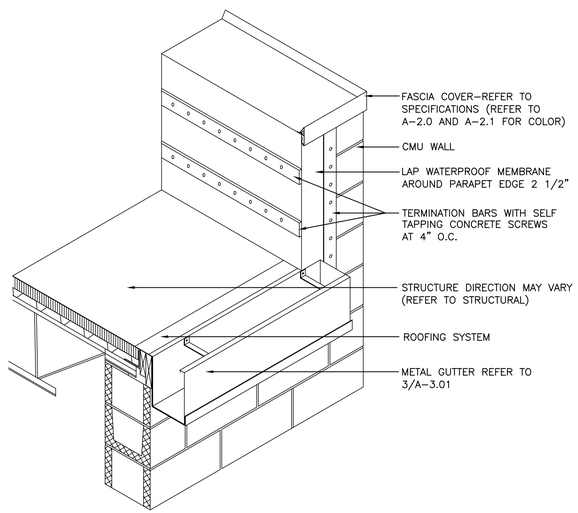

2 PARAPET/GUTTER FLASHING

SCALE: 3/4" = 1'-0" REFER: A-1.1

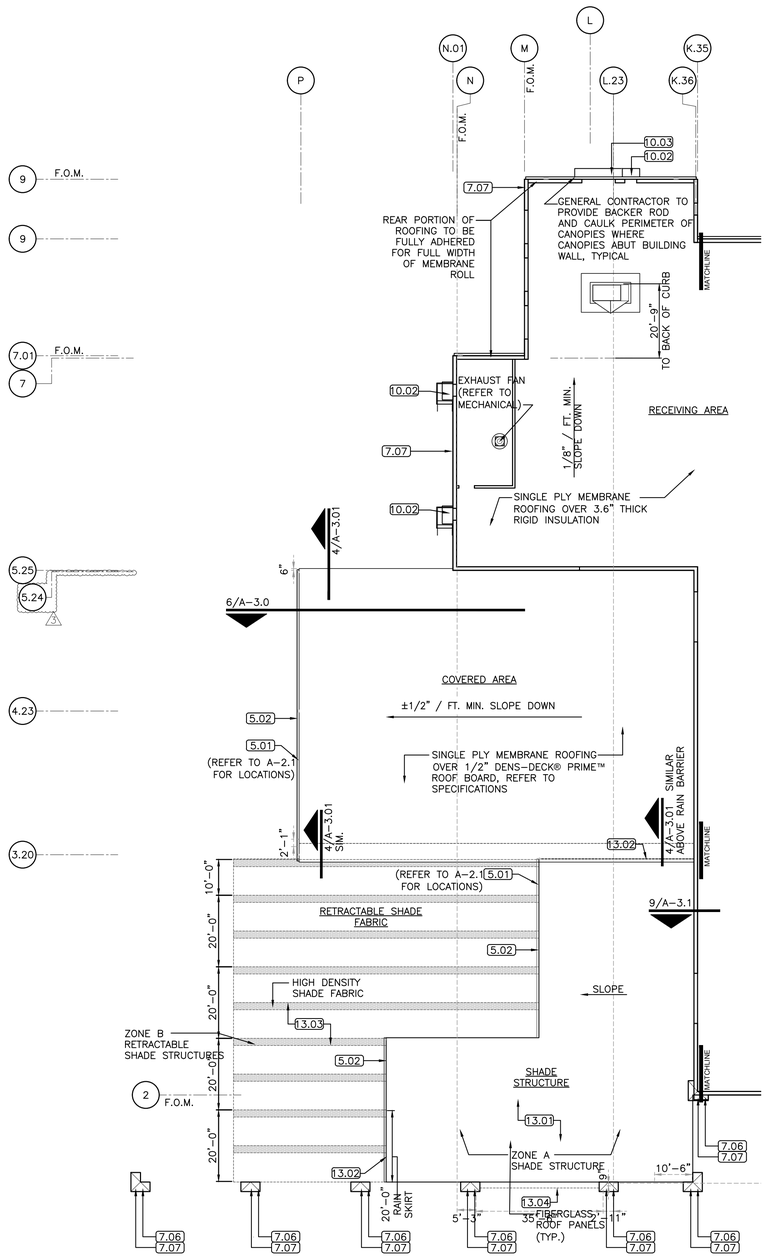

1 ROOF PLAN

SCALE: 1"=20'-0"

KEYNOTES

1.01 SIGNAGE – FURNISHED AND INSTALLED BY OWNER (LOWE'S). REFER TO SHEETS A-3.2 AND A-3.3 FOR BLOCKING LOCATIONS. HORIZONTAL POSITION OF SIGNAGE TO BE CENTERED ON BACKGROUND ELEMENT.

2.01 CHAINLINK FENCE WITH BLACK VINYL COATED FABRIC (REFER TO SHEET A-7.0 AND SPECIFICATION SECTION 02822).

2.02 BLACK TUBE STEEL FENCE (REFER TO SHEET A-7.2 AND SPECIFICATION SECTION 02822).

2.03 EXPANDED METAL SECURITY MESH UP TO 10'-0" ABOVE FINISHED GRADE (REFER TO SHEETS A-7.0, A-2.0-2.01 AND A-2.11 FOR FENCE HEIGHT AND SPECIFICATION SECTION 02822).

2.04 CHAIN-LINK GATE (REFER TO SHEET A-7.0 FOR SIZE AND TYPE AND SPECIFICATION SECTION 02822).

2.05 EXTERIOR TRENCH DRAIN (REFER TO DETAIL 2/S-3.1, SHEETS P-1 AND P-3, AND SPECIFICATION SECTION 15431).

2.06 48" HIGH x 75' LONG GUARDRAIL/FENCE (REFER TO DETAIL 12/S-3.0).

2.07 FLOOR DRAIN (REFER TO SHEET P-1, P-3 AND SPECIFICATION SECTION 15431).

3.01 CONCRETE RETAINING WALL WITH 6" HIGH CONCRETE CURB (REFER TO SHEETS S-1.01 AND S-3.1).

3.02 CONCRETE SIDEWALK.

3.03 NOT USED.

3.04 CONCRETE FILLED ISLAND (REFER TO STRUCTURAL AND CIVIL PLANS).

3.05 CONCRETE TRANSFORMER PAD, VERIFY SIZE AND LOCATION WITH UTILITY COMPANY PRIOR TO POURING (REFER TO SHEETS A-4.01 AND S-1.0).

3.06 CONCRETE GENERATOR PAD, VERIFY SIZE AND LOCATION PRIOR TO POURING (REFER TO SHEETS A-4.01 AND S-1.0).

3.07 CONCRETE SLAB ON GRADE (REFER TO STRUCTURAL PLANS).

3.08 JOINT SEALANT OVER 1/2" EXPANSION JOINT FILLER (REFER TO SPECIFICATION SECTION 07920).

3.09 CONCRETE CONTROL JOINT (REFER TO SHEET S-3.0).

3.10 CONCRETE PAD AT DOORS, VERIFY SIZE PRIOR TO POURING (REFER TO SHEETS A-1.01 AND S-1.0)

3.11 CONCRETE PIER.

4.01 NOT USED

4.02 MASONRY CONTROL JOINT, TYPICAL (REFER TO SHEETS A-5.0 AND S-3.0).

4.03 SINGLE SCORED SMOOTH FACE CMU.

4.04 SPLIT FACE CMU.

4.05 SMOOTH FACE CMU.

4.06 BULLNOSE OR ROWLOCK CMU ACCENT BLOCK.

4.07 SINGLE SCORED SPLIT FACE CMU.

5.01 METAL DOWNSPOUTS.

5.02 METAL GUTTER.

5.03 STEEL BEAM, PAINTED.

5.04 ROOF ACCESS LADDER, PAINTED (REFER TO SHEET A-7.1).

5.05 FORKLIFT DAMAGE PREVENTION BARS-16'-0"L WITH BOTTOM AT 9'-6" A.F.F. (REFER TO SHEET A-2.21)

5.06 FORKLIFT DAMAGE PREVENTION BARS- 7'-0"L WITH BOTTOM AT 9'-4" A.F.F. (REFER TO SHEET A-2.21)

5.07 FORKLIFT DAMAGE PREVENTION BARS-16'-0"L WITH BOTTOM AT 13'-6" A.F.F. (REFER TO SHEET A-2.21)

5.08 PROVIDE 4"ø PIPE BOLLARDS 2'-6" A.F.F. (REFER TO DETAIL 1/S-0.11). NUMBER AND LOCATIONS PER ARCHITECTURAL PLANS AND DOOR DETAILS.

5.09 PROVIDE 4"ø PIPE BOLLARDS 4'-0" ABOVE SLAB (REFER TO DETAIL 1/S-0.11). NUMBER AND LOCATIONS PER ARCHITECTURAL PLANS AND DOOR DETAILS.

5.10 PROVIDE 4"ø PIPE BOLLARDS 4'-0" ABOVE SLAB (REFER TO DETAIL 1/S-0.11) AT GAS METER. NUMBER AND LOCATION PER P-3.

5.11 STEEL DOWNSPOUT COVER (REFER TO DETAIL 7/A-3.1)

6.01 CART GUARD – P.T. 2x10 STAINED LIGHT GRAY, MOUNTED 5" A.F.F. TO BOTTOM WITH 1/2"ø x 4" EXP. BOLTS (COUNTERSUNK) AT 36" O.C.

6.02 TELEPHONE BOARD – FIRE RETARDANT PLYWOOD "CLASS A" ALONG ENTIRE WALL UP TO 96" A.F.F.

7.01 ACRYLIC FINISH SYSTEM, BY E.I.F.S. MANUFACTURER, ON SMOOTH FACE CMU WITH FLUSH JOINTS.

7.02 EXTERIOR INSULATION AND FINISH SYSTEM (E.I.F.S.).

7.03 NOT USED.

7.04 PREFINISHED METAL COPING ON TOPS OF PARAPETS AND PILASTERS.

7.05 STANDING SEAM ARCHITECTURAL METAL ROOF PANELS.

7.06 CORNICE – E.I.F.S. WITH PREFINISHED METAL COPING OR FASCIA (REFER TO SHEETS A-2.1, A-3.3 AND A-3.4)

7.07 PREFINISHED METAL FASCIA.

7.08 STANDING SEAM STRUCTURAL METAL ROOF PANELS.

8.01 OVERHEAD DOOR. (REFER TO SHEET A-6.1).

8.02 HOLLOW METAL DOOR AND FRAME TYPICAL, PAINTED.

8.03 ALUMINUM AND GLASS STOREFRONT SYSTEM.

8.04 AUTO-SLIDER DOOR (REFER TO SHEET A-6.1).

9.01 UNOBSTRUCTED PATH, AS DIMENSIONED (REFER TO GENERAL NOTES).

9.02 12" HIGH LETTERS PAINTED WHITE.

10.01 ALUMINUM CANOPY 22'-0" x 3'-0" MOUNT AT 14'-8" A.F.F. (REFER TO SPECIFICATION SECTION 10530)

10.02 ALUMINUM CANOPY 5'-0" x 3'-0" MOUNT AT 8'-0" A.F.F. (REFER TO SPECIFICATION SECTION 10530)

10.03 ALUMINUM CANOPY 13'-0" x 3'-0" MOUNT AT 10'-8" A.F.F. (REFER TO SPECIFICATION SECTION 10530)

11.01 TRASH COMPACTOR – FURNISHED AND INSTALLED BY OWNER (LOWE'S).

11.02 DOCK LEVELER – EDGE-OF-DOCK MOUNTED (REFER TO SPECIFICATION SECTION 11160).

11.03 DOCK LEVELER – PIT-MOUNTED (REFER TO SHEET A-3.1 AND SPECIFICATION SECTION 11160).

11.04 DOCK SHELTER (REFER TO SHEET A-3.1 AND SPECIFICATION SECTION 11160)

11.05 VEHICLE RESTRAINT MODEL SL80 BY SERCO® (REFER TO SHEETS A-3.1 AND E-6.05 AND SPECS).

13.01 SHADE STRUCTURE – CORRUGATED METAL AND FIBERGLASS ROOF PANELS OVER STRUCTURAL TUBING SYSTEM (REFER TO SPECIFICATION SECTION 13123).

13.02 RAIN BARRIER-STANDING SEAM METAL PANELS PROVIDED AND INSTALLED BY SHADE STRUCTURE MFR.

13.03 RETRACTABLE SHADE FABRIC SYSTEM (REFER TO SPECIFICATION SECTION 13015).

13.04 RAIN SKIRT – STANDING SEAM METAL PANELS TO MATCH FRONT STANDING SEAM COLOR.

REVISIONS

◇ PRE-BID SET ISSUE DATE △ POST BID SET ISSUE DATE

DATE		DESCRIPTION
10.07.25	△1	Criteria Updates

STATE OF FLORIDA PERRY M. PETRILLO REGISTERED ARCHITECT AR95158

LICENSE:
NCARB REG. No. 44,575
NEW JERSEY Lic. No. 12119
NEW YORK Lic. No. 024375-1
DISTRICT OF COLUMBIA Lic. No. RA-015310-B
VIRGINIA Lic. No. 0401 011655
FLORIDA Lic. No. AR95158

PERRY M. PETRILLO ARCHITECTS PC
9 Park Avenue
Park Ridge, New Jersey 07656
Telephone (201) 307-6153
Facsimile (201) 307-6158

LOWE'S HOME CENTERS, LLC
1000 LOWE'S BOULEVARD
MOORESVILLE, NC 28117
704.758.1000 (PH.)

THIS DRAWING IS THE PROPERTY OF LOWE'S HOME CENTERS, LLC. ANY USE OR REPRODUCTION IN WHOLE OR PART IS PROHIBITED WITHOUT THE EXPRESSED WRITTEN CONSENT OF LOWE'S HOME CENTERS, LLC. COPYRIGHT 2025-2027 ALL RIGHTS RESERVED

LOWE'S

ROOF PLAN AND DETAILS
GARDEN CENTER - ZONE B
LOWE'S OF WESTLAKE
5683 SEMINOLE PRATT WHITNEY RD.
Westlake, Florida, 33470
PCN: 77-40-43-01-29-000-0010
PROJECT No: 23.300 | DRAWN BY: I.DM | CHECKED BY:

CRITERIA ISSUE DATE: 02-2025
PERMIT SET ISSUE DATE: 08-22-2025
CONSTRUCTION SET ISSUE DATE: 04-14-2025
DRAWING NUMBER:
A-1.11

FINAL	SECOND	ORIGINAL