ALDI Inc. - Coconut Crossing, FL

Store No. 50
12850 Northlake Boulevard
Coconut Crossing, FL 33412

ARCHITECT'S JOB NUMBER: 22-0267A
ISSUE DATE: 07/08/24

SITE PLAN APPROVAL

COUNTY PROJECT NUMBER: ADMN-23-09-0033
AMENDMENT NUMBER: ADMN-25-05-0058

PROJECT SUMMARY

THIS PROJECT CONSISTS OF THE CONSTRUCTION OF A GROUND-UP ONE STORY BUILDING FOR OCCUPANCY BY ALDI FOOD MARKET.

CIVIL ENGINEER OF RECORD:

Thomas Engineering Group
Ryan O. Thomas, PE
6300 NW 31ST Ave.
Fort Lauderdale, FL 33309
(954) 202-7000
(954) 202-7070 Fax
Contact: Frank Youngman, PE
(954) 202-7000
fyoungman@thomaseg.com

STRUCTURAL ENGINEER OF RECORD:

APD Engineering & Architecture, PLLC
615 Fishers Run
Victor, NY 14564
Brent Powell, PE, LEED AP
(585) 742-2222
(585) 924-4914 Fax
Contact: Steven Flint, PE
(585) 742-0235
sflint@apd.com

MECHANICAL ENGINEER OF RECORD:

APD Engineering & Architecture, PLLC
615 Fishers Run
Victor, NY 14564
Kenneth Rea, PE
(585) 742-2222
(585) 924-4914 Fax
Contact: Kenneth Rea, PE
(585) 869-9649
krea@apd.com

ELECTRICAL ENGINEER OF RECORD:

APD Engineering & Architecture, PLLC
615 Fishers Run
Victor, NY 14564
Kenneth Rea, PE
(585) 742-2222
(585) 924-4914 Fax
Contact: Kenneth Rea, PE
(585) 869-9649
krea@apd.com

LOCATION MAP:

PROJECT LATITUDE: 26.8118
PROJECT LONGITUDE: -80.2374

NORTH

NOTES

NOTE: THESE DRAWINGS ARE PART OF THE CONTRACT DOCUMENTS AS DESCRIBED IN THE PROJECT MANUAL; IN ANY AND ALL CONFLICTS BETWEEN THE DRAWINGS AND THE TECHNICAL SPECIFICATIONS, THE MOST STRINGENT REQUIREMENT WILL GOVERN AND THE G.C. SHALL COORDINATE WITH THE ALDI REPRESENTATIVE.

THESE DOCUMENTS ARE FOR THE SOLE PURPOSE OF INITIAL BUILDING PERMIT SUBMITTAL ONLY. ANY COMMENTS, REVISIONS OR CORRECTIONS BASED ON BUILDING DEPARTMENT REVIEW AND/OR BUILDING CODE INTERPRETATION ITEMS ARE THE SOLE RESPONSIBILITY OF THE OWNER AND REGIONAL ARCHITECT WILL NOT BE HELD LIABLE FOR ANY CHANGE ORDERS RESULTING FROM THESE ITEMS. FINAL BID PRICES SHOULD NOT BE SUBMITTED UNTIL THE BUILDING PERMIT HAS BEEN ISSUED.

DRAWINGS ARE BASED ON ALDI VERSION 7.0ER PROTOTYPE RELEASED ON 05.30.24

PLOTTED: 7/29/2025 9:43 AM

Drawing Index

SHEET #	SHEET NAME	REVISION DATE 10/02/24	10/08/24	11/18/24	12/20/24	07/29/25	XX/XX/XX	XX/XX/XX	XX/XX/XX
G-001	Cover Sheet	X	X	X	X	X			
G-002	Code Review	X				X			
G-003	Accessibility Details					X			
G-004	Accessibility Details					X			
G-005	Responsibility Schedule - Volume 2					X			
G-006	Responsibility Schedule - Appendix A			X		X			
G-007	Responsibility Schedule - Appendix B					X			
S-001	General Structural Notes (GSN)					X			
S-101	Foundation Plan					X			
S-102	Slab Plan								
S-111	Roof Framing Plan					X			
S-112	High Roof & Canopy Framing Plans								
S-301	Foundation Details					X			
S-302	Foundation Details					X			
S-303	Foundation Details					X			
S-304	Foundation Details								
S-401	Steel Framing Sections & Details					X			
S-402	Steel Framing Sections & Details								
S-403	Steel Framing Sections & Details								
S-404	Steel Framing Sections & Details					X			
S-405	Steel Framing Sections & Details								
S-406	Steel Framing Sections & Details					X			
S-407	Steel Framing Sections & Details					X			
A-001	General Notes, Symbols, & Abbrev.					X			
A-101	Floor Plan	X		X		X			
A-102	Keyed Notes Plan			X		X			
A-111	Reflected Ceiling Plan			X		X			
A-121	Roof Plan			X		X			
A-131	Operations Plan			X		X			
A-201	Exterior Elevations		X		X	X			
A-202	Exterior Elevations		X		X	X			
A-211	Interior Elevations					X			
A-212	Interior Elevations					X			
A-213	Interior Elevations					X			
A-214	Interior Elevations					X			
A-215	Interior Elevations					X			
A-216	Interior Elevations			X		X			
A-301	Wall Sections					X			
A-302	Wall Sections					X			
A-303	Wall Sections					X			
A-304	Wall Sections					X			
A-305	Wall Sections					X			
A-306	Wall Sections					X			
A-307	Wall Sections					X			
A-401	Enlarged Plans			X		X			
A-402	Enlarged Plans					X			
A-501	Exterior Details					X			
A-502	Exterior Details					X			
A-503	Exterior Details					X			
A-504	Exterior Details					X			
A-505	Exterior Details					X			
A-506	Exterior Details					X			
A-507	Exterior Details					X			
A-511	Interior Details			X		X			
A-512	Interior Details					X			
A-513	Interior Details					X			
A-601	Door Schedules & Details	X				X			
A-602	Window Elevations & Details	X		X		X			
A-603	Finish Schedules & Notes			X		X			

SHEET #	SHEET NAME	REVISION DATE 10/02/24	10/08/24	11/18/24	12/20/24	07/29/25	XX/XX/XX	XX/XX/XX	XX/XX/XX
P-001	Plumbing Schedules					X			
P-101	Plumbing Floor Plan					X			
P-102	Plumbing Drainage Location Plan					X			
P-201	Enlarged Plumbing Plans					X			
P-301	Isometric Diagrams					X			
P-401	Plumbing Details					X			
FP-101	Fire Protection Floor Plan					X			
FP-201	Fire Protection Legend & Details								
H-001	HVAC Schedules, Symbols & Notes	X				X			
H-101	HVAC Floor Plan					X			
SE-101	Site Lighting Electrical Plan								
E-001	Electrical Material List & Notes			X		X			
E-101	Lighting Plan	X		X	X	X			
E-102	Lighting Schedules & Diagrams			X		X			
E-201	Electrical Plan			X		X			
E-301	Enlarged Electrical Plans			X		X			
E-401	One-Line Diagram & Details			X		X			
E-402	Electrical Panel Schedules			X		X			
E-501	Electrical Details			X		X			
E-502	Electrical Details			X		X			
CLP-101	Fire Alarm Conduit Plan					X			

Deferred Submittals

	Fire Suppression System Drawings
	Fire Alarm System Drawings
	Security System Drawings

Reference Drawings

R0.0	General Notes and Specifications
R1.0	Fixture Floor Plan
R2.0	Refrigeration Plumbing Floor Plan
R3.0	Refrigeration Mechanical Floor Plan
R3.1	Piping Floor Plan, Legend, Roof Detail
R4.0	Refrigeration Electrical Floor Plan
R4.1	EMS Ethernet Cabling
R4.2	EMS RS485 Cabling
R4.3	EMS Details
R4.4	EMS Details
R5.0	Case and Box Evaporator Details
R6.0	Fluid Cooler & Pump Station Details
R6.1	Pump Station Details
R7.0	Refrigeration Piping Details
R7.1	Refrigeration Piping Details

APD ENGINEERING ARCHITECTURE
615 Fishers Run Victor, NY 14564
585.742.2222 - www.apd.com

Copyright © 2024
APD Engineering & Architecture
615 Fishers Run
Victor, NY 14564

Drawing Alteration

It is a violation of law for any person, unless acting under the direction of licensed Architect, Professional Engineer, Landscape Architect, or Land Surveyor to alter any item on this document in any way. Any licensee who alters this document is required by law to affix his or her seal and to add the notation "Altered By" followed by his or her signature and the specific description of the alteration or revision.

DO NOT SCALE PLANS

Copying, Printing, Software and other processes required to produce these prints can stretch or shrink the actual paper or layout. Therefore, scaling of this drawing may be inaccurate. Contact APD E&A with any need for additional dimensions or clarifications.

Issued:		Date:
A	Issued for Permit	07/08/24
B	Issued for Bid	07/29/25
C		
D		
E		

Revisions:		Date:
1	AHJ Responses	10/02/24
2	AHJ Responses	10/08/24
3	Owner Changes	11/18/24
4	AHJ Responses	12/20/24
5	Owner Changes	07/29/25
6		
7		
8		
9		
10		
11		
12		

PROJECT ARCHITECT/ENGINEER
Daniel Sargent

PROJECT LEAD
John Lynch

NOT FOR CONSTRUCTION

Seal Seal

ALDI Inc.
1171 North State Road 7
Royal Palm Beach, FL 33411
(561) 640-8000

ALDI Inc. Store #: 50
Coconut Crossing, FL
12850 Northlake Boulevard
Palm Beach Gardens, FL 33412
Palm Beach County

Project Name & Location:

Cover Sheet

Drawing Name:

Prototype: V7.08 LHRD
Type: GROUND UP
Drawn By: JWL
Scale: As Noted

Project No. 22-0267A

G-001
Drawing No.

PROJECT INFORMATION:

THE BUILDING IS IN COMPLIANCE WITH THE:
FLORIDA BUILDING CODE 8TH EDITION (2023) BUILDING
FLORIDA BUILDING CODE 8TH EDITION (2023) ACCESSIBILITY
FLORIDA BUILDING CODE 8TH EDITION (2023) ENERGY CONSERVATION
FLORIDA BUILDING CODE 8TH EDITION (2023) MECHANICAL
FLORIDA BUILDING CODE 8TH EDITION (2023) PLUMBING
FLORIDA BUILDING CODE 8TH EDITION (2023) FUEL GAS
2020 NATIONAL ELECTRICAL CODE (NFPA 70)
FLORIDA FIRE PREVENTION CODE 8TH EDITION (2023)
1 NFPA 101, 2021 - WITH FLORIDA AMENDMENTS
NFPA 241, 2019

BUILDING PLANNING (CHAPTER 3,4,5,6):		
OCCUPANCY CLASSIFICATION (302.0 - 312.0)	MIXED OCCUPANCY GROUP M & S-2	
	(ALLOWABLE)	(ACTUAL)
NUMBER OF STORIES (TABLE 504.4):	2	1
BUILDING HEIGHT (TABLE 504.3):	60'-0"	28'-10"
BUILDING AREA - S1 (TABLE 506.2):	36,000	
FRONTAGE INCREASE (I_f) (506.3.3):	1,899	
MAXIMUM ALLOWABLE SQUARE FOOTAGE (A_a):	37,899	20,387

BUILDING AREA (506):
STREET FRONTAGE INCREASE:

- BUILDING PERIMETER: 612'-7"
- BUILDING PERIMETER FRONTING ON A STREET OR UNOCCUPIED SPACE: 282'-5"
- INCREASE TO MAX. ALLOWABLE AREA (I_f): 21.1%

AREA INCREASE CALCULATOR			
	BASE AREA	AREA INCREASE	
A_a	A_t	(NS * I_f) / 100	
A_a	36,000	1,899	

TYPES OF CONSTRUCTION (CHAPTER 6)
CONSTRUCTION CLASSIFICATION: VB

FIRE-RESISTANCE RATING REQUIREMENTS: (TABLE 601)
PRIMARY STRUCTURAL FRAME: 0 HR.
BEARING WALLS
EXTERIOR: 0 HR.
INTERIOR: 0 HR.
NONBEARING WALLS AND PARTITIONS
EXTERIOR: 0 HR.
INTERIOR: 0 HR.
FLOOR CONSTRUCTION: 0 HR.
ROOF CONSTRUCTION: 0 HR.

FIRE SEPARATION DISTANCE = X (feet) (TABLE 705.5)
LESS THAN 5': 2 HR.
GREATER THAN OR EQUAL TO 5', LESS THAN 10': 1 HR.
GREATER THAN OR EQUAL TO 10', LESS THAN 30': 0 HR.
EQUAL TO OR GREATER THAN 30': 0 HR.

FIRE AND SMOKE PROTECTION FEATURES: (CHAPTER 7)
FIRE-RESISTANCE RATING OF STRUCTURAL MEMBERS (704): NOT REQUIRED
EXTERIOR WALLS (705): NOT REQUIRED
FIRE WALLS (706): NOT REQUIRED
FIRE BARRIERS(707): NOT REQUIRED
FIRE PARTITIONS (708): NOT REQUIRED
SMOKE BARRIERS (709): NOT REQUIRED
SMOKE PARTITIONS (710): NOT REQUIRED
FLOOR AND ROOF ASSEMBLIES (711): NOT REQUIRED
VERTICAL OPENINGS (712): NOT REQUIRED
SHAFT ENCLOSURES (713): NOT REQUIRED
PENETRATIONS (714): NOT REQUIRED
JOINTS AND VOIDS (715): NOT REQUIRED
OPENING PROTECTIVES (716): NOT REQUIRED
DUCTS AND AIR TRANSFER OPENINGS (717): NOT REQUIRED
CONCEALED SPACES (718): PROVIDED
FIRE-RESISTANCE REQUIREMENTS FOR PLASTER (719): NOT REQUIRED
THERMAL-AND SOUND-INSULATING MATERIALS(720): NOT REQUIRED

INTERIOR FINISHES AND DECORATIVE MATERIALS (CHAPTER 8)

INTERIOR WALL AND CEILING FINISH REQUIREMENTS BY OCCUPANCY (TABLE 803.11)						
OCCUPANCY/ GROUP	SPRINKLERED			NONSPRINKLERED		
	INTERIOR EXIT STAIRWAYS AND RAMPS AND EXIT PASSAGEWAYS	CIRRDORS AND ENCLOSURE FOR EXIT ACCESS STAIRWAYS AND RAMPS	ROMS AND ENCLOSED SPACES	INTERIOR EXIT STAIRWAYS AND RAMPS AND EXIT PASSAGEWAYS	CIRRDORS AND ENCLOSURE FOR EXIT ACCESS STAIRWAYS AND RAMPS	ROMS AND ENCLOSED SPACES
B, E, M, R-1	B	C	C	A	B	C
S	C	C	C	B	B	C

FIRE PROTECTION SYSTEMS (CHAPTER 9)
AUTOMATIC SPRINKLER SYSTEMS (903): (REQUIRED) YES (PROVIDED) YES
STANDPIPE SYSTEM (905): (REQUIRED) NO (PROVIDED) NO
PORTABLE FIRE EXTINGUISHERS (906): (REQUIRED) YES (PROVIDED) YES
FIRE ALARM AND DETECTION SYSTEMS(907): (REQUIRED) NO (PROVIDED) YES
EMERGENCY ALARM SYSTEMS (908): (REQUIRED) NO (PROVIDED) NO
SMOKE CONTROL SYSTEMS (909): (REQUIRED) NO (PROVIDED) NO
SMOKE AND HEAT REMOVAL(910): (REQUIRED) NO (PROVIDED) NO
FIRE COMMAND CENTER (911): (REQUIRED) NO (PROVIDED) NO
FIRE DEPARTMENT CONNECTIONS (912): (REQUIRED) YES (PROVIDED) YES

MEANS OF EGRESS (CHAPTER 10)
OCCUPANT LOAD (1004):

OCCUPANCY LOADS (FBC 1004.0 TABLE 1004.5 & NFPA 101 TABLE 7.3.1.2)			
OCCUPANCY USE	SQUARE FEET/ OCCUPANT	TOTAL OCCUPANCY SQUARE FOOTAGE	OCCUPANTS
MERCANTILE	30	12,935	432
BUSINESS	150	1,004	7
STORAGE / STOCK	300	4,553	16
TOTAL OCCUPANT LOAD			455

MEANS OF EGRESS SIZING (1005):

USE GROUP OR SPACE DESCRIPTION	(A)	(B)		EXIT WIDTH (IN.)*			
	OCCUPANT LOAD BY USE	EGRESS WIDTH PER OCCUPANT (SECTION 1005.3)		REQUIRED WIDTH (SECTION 1005) (A X B)		ACTUAL WIDTH SHOWN ON PLANS	
		STAIR	LEVEL	STAIR	LEVEL	STAIR	LEVEL
MERCANTILE	432	0.3	0.2	129.6	86.4	SEE G-002 EGRESS PLAN FOR ACTUAL WIDTHS	
BUSINESS	7	0.3	0.2	2.1	1.4		
STORAGE	16	0.3	0.2	4.8	3.2		
TOTAL:	455	0.3	0.2	136.5	91.0		

* Where more than one exit, or access to more than one exit, is required, the means of egress shall be configured such that the loss of one exit or access to one exit shall not reduce the available capacity to less than 50 percent of the total required capacity (Section 1005.5)

NUMBER OF EXITS AND EXIT ACCESS DOORWAYS (1006): 1 (REQUIRED) 3 (PROVIDED)4
COMMON PATH OF EGRESS TRAVEL (TABLE 1006.2.1): 75' MERCANTILE 100' STORAGE
ACCESSIBLE MEANS OF EGRESS (1009) &
FBC ACCESSIBILITY CODE: (REQUIRED) YES (PROVIDED) YES
DOOR WIDTH (1010.1.1):
MINIMUM CLEAR OPENING: 32"
MAXIMUM DOOR LEAF: 48"
PANIC AND FIRE EXIT HARDWARE (1010.2.9): (REQUIRED) NO (PROVIDED) YES
EXIT SIGNS (1013.1): (REQUIRED) YES (PROVIDED) YES
HANDRAILS (1014.2): 34" H. MIN., 38" H. MAX.
GUARDS (1015.3): 42" H. IF ADJACENT GRADE IS GREATER THAN 30"
MAXIMUM TRAVEL DISTANCE TO AN EXIT (TABLE 1017.2): 250' MERCANTILE 400' STORAGE (SRPINKLERED)
MINIMUM CORRIDOR WIDTH (1020.3): 44" / 60" FOR H.C. TURN AROUND (AT 200' INTERVALS)
MAXIMUM DEAD END CORRIDOR DISTANCE (1020.5): 50' (SPRINKLERED) WHEN MORE THAN ONE EXIT IS REQUIRED

ACCESSIBILITY (FBC-A CHAPTERS 2 & 9)

CHECK-OUT AISLES (TABLE 227.2 & 904): EMPLOYEE MANNED: (REQUIRED) 1 (PROVIDED) 4
SELF CHECKOUT (SCO): (REQUIRED) 2 (PROVIDED) 6

PLUMBING FIXTURE REQUIREMENTS:

MINIMUM NO. OF REQUIRED PLUMBING FIXTURES (FBCPC TABLE 2902.1)							
OCCUPANCY/ GROUP	WATER CLOSETS (URINALS)		LAVATORIES		BATHTUBS/ SHOWERS	DRINKING FOUNTAINS	OTHER
	MALE	FEMALE	MALE	FEMALE			
MERCANTILE (REQUIRED)	1 PER 500		1 PER 750		--	1 PER 1,000	1 SERVICE SINK
MERCANTILE (PROVIDED)	1+1	1+1	1	1	--	2	1 SERVICE SINK

AREA SUMMARY (FOR REFERENCE ONLY)

COCONUT CROSSING, FL AREA SUMMARY		
OCCUPANCY USE	ROOM NAME	SQUARE FOOTAGE
MERCANTILE (M)	SALES / VESTIBULE	12,623
	UNISEX 2	96
	UNISEX 1	96
	HALL	120
SUBTOTAL (MERCANTILE)		12,935
BUSINESS (B)	OFFICE	258
	BREAK ROOM	309
	eCOMMERCE	401
	CLOSET	36
SUBTOTAL (BUSINESS)		1004
STORAGE / STOCK (S-2)	BACKROOM	2,568
	COOLER	1,338
	FREEZER	647
SUBTOTAL (STORAGE / STOCK)		4,553
SUBTOTAL (OCCUPANCIES)		18,492
EXTERIOR /INTERIOR WALLS / UNOCCUPIED SPACE		908
BUILDING SQUARE FOOTAGE		19,400
EXTERIOR CANOPY		987
TOTAL SQUARE FOOTAGE (INCLUDING CANOPY)		20,387

NOTE:
THIS FACILITY DOES NOT CONTAIN A BAKERY, A BUTCHER, A DELI, OR A FISH COUNTER. ALL FOOD IS PREPACKAGED AND THERE IS NO ON-SITE FOOD PREPARATION.

1 NOTE:
A RADIO SIGNAL STRENGTH SURVEY IS TO BE PROVIDED PRIOR TO FINAL TO VERIFY MINIMUM EMERGENCY RESPONDER RADIO COVERAGE HAS BEEN MET. IF A BDA SYSTEM IS DEEMED TO BE NEEDED, A SEPARATE PERMIT IS REQUIRED FOR THE INSTALLATION.

1 NOTE:
SEPARATE PERMITS ARE REQUIRED FOR FIRE ALARM, FIRE SPRINKLER, AND ACCESS CONTROL/CARD READER SYSTEMS.

1 NOTE:
A TRUSS PLACARD WILL BE PROVIDED IN ACCORDANCE WITH FLORIDA STATUE 633.01 (1).

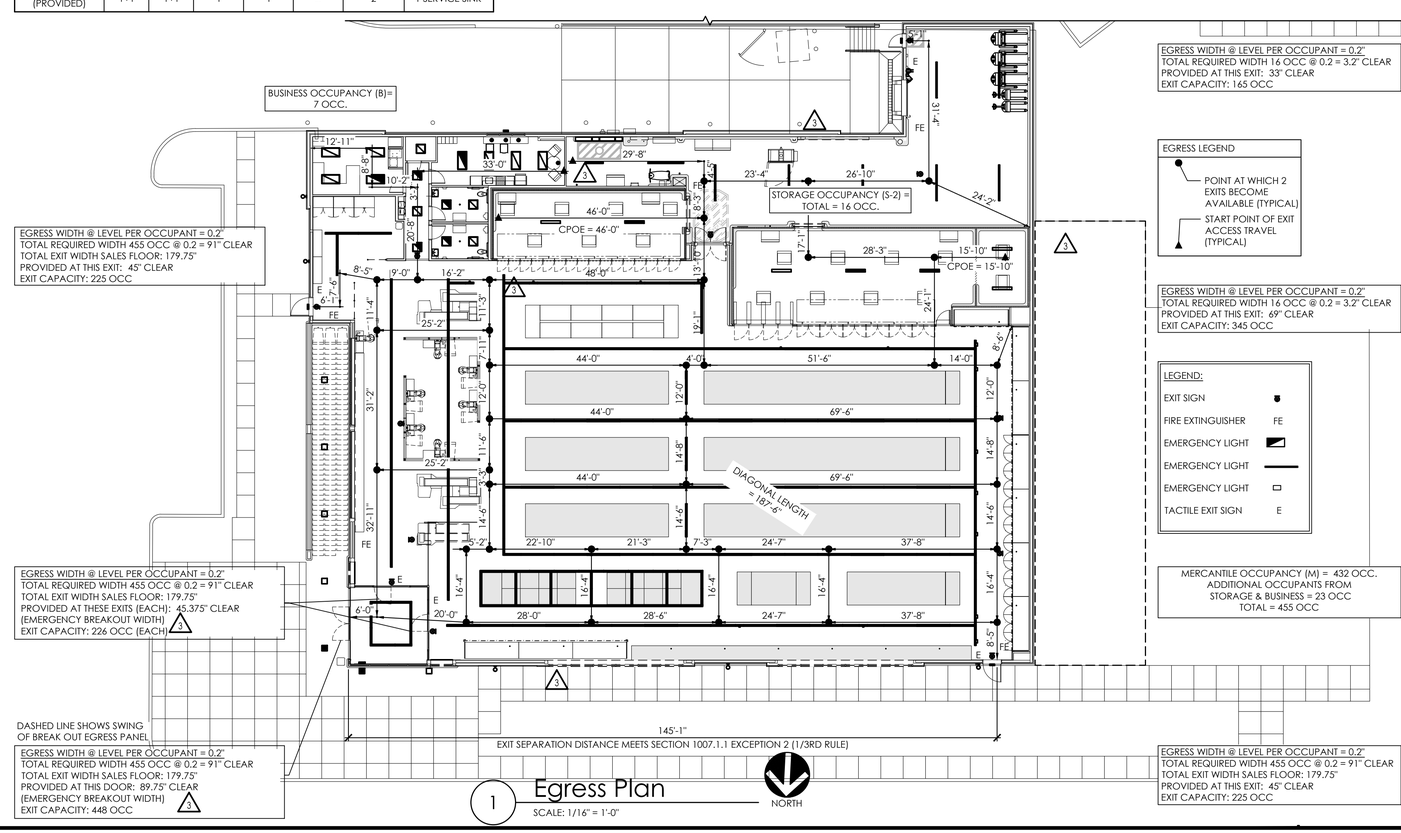

1 Egress Plan
SCALE: 1/16" = 1'-0"

APD ENGINEERING ARCHITECTURE
615 Fishers Run Victor, NY 14564
585.742.2222 - www.apd.com

Copyright © 2024
APD Engineering & Architecture
615 Fishers Run
Victor, NY 14564

Drawing Alteration
It is a violation of law for any person, unless acting under the direction of licensed Architect, Professional Engineer, Landscape Architect, or Land Surveyor to alter any item on this document in any way. Any licensee who alters this document is required by law to affix his or her seal and to add the notation "Altered By" followed by his or her signature and the specific description of the alteration or revision.

DO NOT SCALE PLANS
Copying, Printing, Software and other processes required to produce these prints can stretch or shrink the actual paper or layout. Therefore, scaling of this drawing may be inaccurate. Contact APD E&A with any need for additional dimensions or clarifications.

Issued:		Date:
A	Issued for Permit	07/08/24
B	Issued for Bid	07/29/25
C		
D		
E		

Revisions:		Date:
1	AHJ Responses	10/02/24
2	Owner Changes	11/18/24
3	Owner Changes	07/29/25
4		
5		
6		
7		
8		
9		
10		
11		
12		

PROJECT ARCHITECT/ENGINEER
Daniel Sargent
PROJECT LEAD
John Lynch

NOT FOR CONSTRUCTION

Seal Seal

ALDI Inc.
1171 North State Road 7
Royal Palm Beach, FL 33411
(561) 640-8000

ALDI Inc. Store #: 50
Coconut Crossing, FL 2
12850 Northlake Boulevard
Palm Beach Gardens, FL 33412
Palm Beach County
Project Name & Location:

Code Review

Drawing Name:

Prototype: V7.08 LHRD	Project No. 22-0267A
Type: GROUND UP	
Drawn By: JWL	G-002
Scale: As Noted	Drawing No.

PLOTTED: 7/29/2025 9:43 AM

CODE REFERENCES ARE PER 2023 FBC - ACCESSIBILITY 8TH EDITION.
REFER TO NOTED SECTIONS FOR MORE INFORMATION.

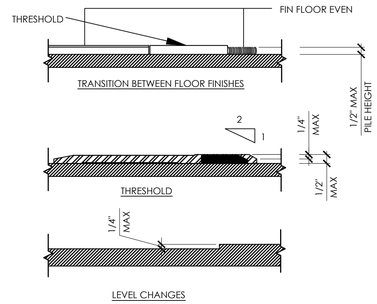

11 Threshold Requirements

SECTIONS 302; 303; 404.2.5

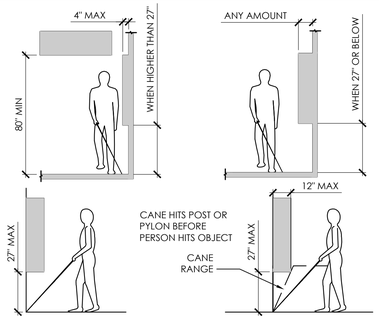

10 Protruding Objects

SECTIONS 307

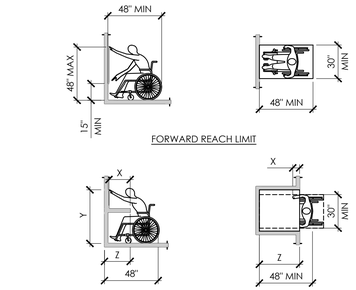

NOTES:
1. X SHALL BE ≤ 25 INCHES; Z SHALL BE ≥ X
2. WHEN X < 20 INCHES, THEN Y SHALL BE 48 INCHES MAXIMUM
3. WHEN X IS 20 TO 25 INCHES, THEN Y SHALL BE 44 INCHES MAXIMUM

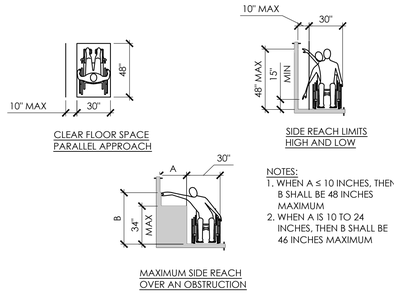

NOTES:
1. WHEN A ≤ 10 INCHES, THEN B SHALL BE 48 INCHES MAXIMUM
2. WHEN A IS 10 TO 24 INCHES, THEN B SHALL BE 46 INCHES MAXIMUM

8 Reach Ranges

SECTION 308

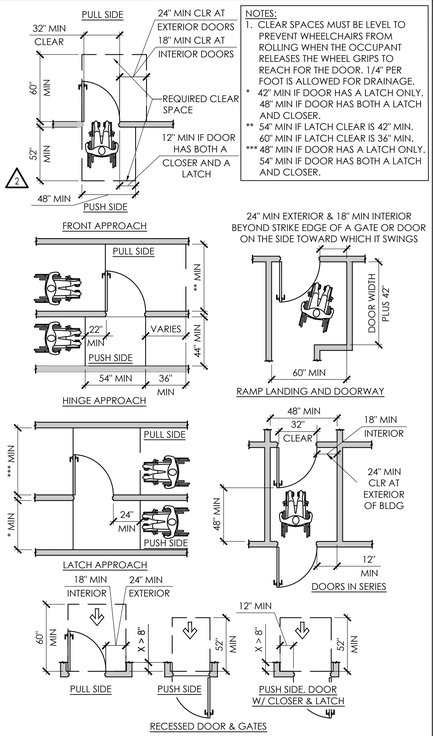

NOTES:
1. CLEAR SPACES MUST BE LEVEL TO PREVENT WHEELCHAIRS FROM ROLLING WHEN THE OCCUPANT RELEASES THE WHEEL GRIPS TO REACH FOR THE DOOR. 1/4" PER FOOT IS ALLOWED FOR DRAINAGE.
* 42" MIN IF DOOR HAS A LATCH ONLY. 48" MIN IF DOOR HAS BOTH A LATCH AND CLOSER.
** 54" MIN IF LATCH CLEAR IS 42" MIN. 60" MIN IF LATCH CLEAR IS 36" MIN.
*** 48" MIN IF DOOR HAS A LATCH ONLY. 54" MIN IF DOOR HAS BOTH A LATCH AND CLOSER.

6 Door Clearances

SECTIONS 404.2.4; 404.3.2

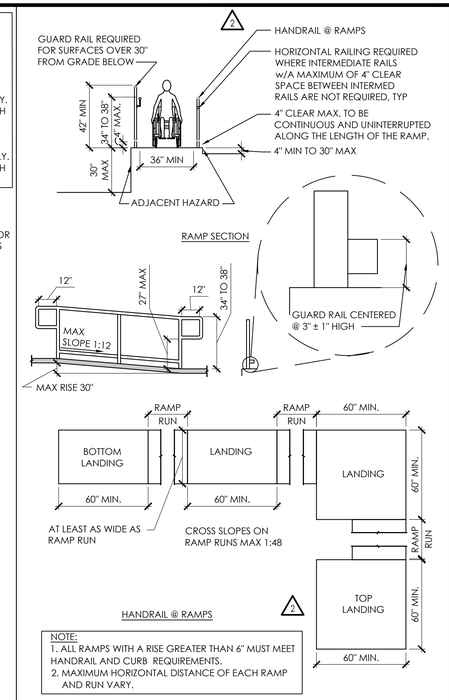

NOTE:
1. ALL RAMPS WITH A RISE GREATER THAN 6" MUST MEET HANDRAIL AND CURB REQUIREMENTS.
2. MAXIMUM HORIZONTAL DISTANCE OF EACH RAMP AND RUN VARY.

3 Ramp Requirements

SECTION 405

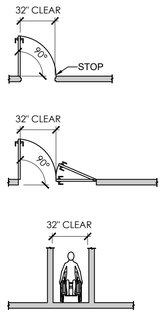

SINGLE DOOR

CLEAR OPENINGS MUST BE BETWEEN THE DOOR IN ITS 90 DEGREE OPENING POSITION & THE FACE OF THE STOP

DOUBLE DOOR

CLEAR OPENINGS FOR TWO LEAF DOORS MUST BE BETWEEN EITHER DOOR IN ITS 90 DEGREE OPEN POSITION & THE EDGE OF THE OTHER DOOR.

PASSAGE CLEARANCE

AN ADULT SIZE WHEELCHAIR AVERAGES 27 INCHES IN WIDTH, THE REQUIRED 32 INCH CLEAR OPENING ALLOWS 2½" INCHES ON EACH SIDE FOR HANDS.

5 Door Widths

SECTIONS 403.5; 404.2.2 & 404.2.3

DOOR TYPE:
1. MINIMUM 10" HIGH SMOOTH SURFACE AT DOOR BOTTOM. EITHER ATTACHED PANEL OR BOTTOM RAIL.

HARDWARE:
1. OPERATIONAL FROM INSIDE WITHOUT USE OF KEY OR SPECIAL KNOWLEDGE OR EFFORT.
2. OPERATIONAL BY SINGLE EFFORT LEVER-TYPE DEVICE (PROHIBIT TIGHT GRASPING, PINCHING OR TWISTING OF THE WRIST)
3. MOUNTED 34" TO 44"
4. MAXIMUM 5 LBS EFFORT TO OPERATE EXTERIOR DOOR & ALL DOOR HARDWARE; 15 LBS FIRE DOORS ONLY.

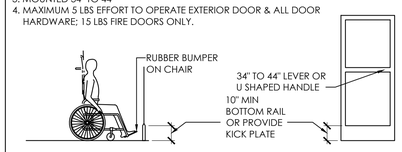

AUTOMATIC DOORS:
1. FULL POWERED AUTOMATIC DOORS SHALL COMPLY WITH ANSI/BHMA A156.10-(2011). LOW-ENERGY AND POWER ASSISTED DOORS SHALL COMPLY WITH ANSI/BHMA A156.19-(2007).
2. COMPENSATING DEVICES OR AUTOMATIC DOOR OPERATORS MAY BE UTILIZED TO MEET THE STANDARDS IN HARDWARE NOTE '4'.

2 Door Requirements

SECTIONS 404.2.7; 404.2.10; 404.3

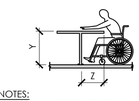

NOTES:
1. Y SHALL BE 28 INCHES MINIMUM 34 INCHES MAXIMUM HEIGHT ABOVE THE FLOOR
2. Z SHALL BE 25 INCHES MINIMUM

13 Dining Surfaces

Section 902.3

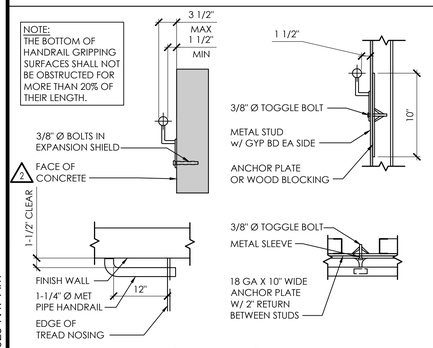

12 Handrail Requirements

SECTION 505

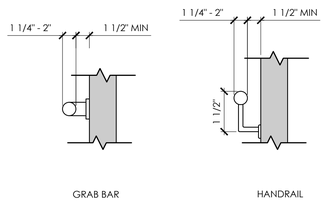

9 Handrail Clearance

SECTION 505.5

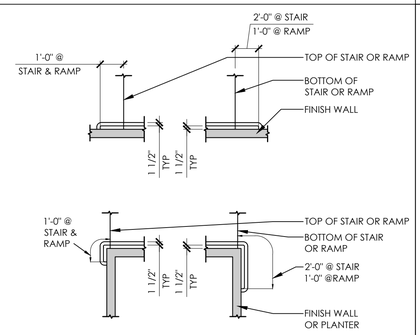

7 Handrails

SECTION 505

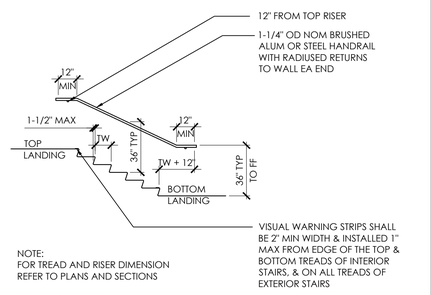

NOTE:
FOR TREAD AND RISER DIMENSION REFER TO PLANS AND SECTIONS

TW = TREAD WIDTH

4 Stairways/Handrails

SECTIONS 504; 505

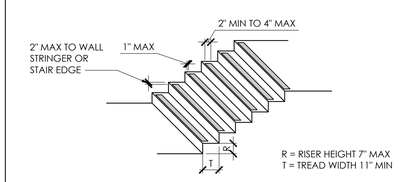

MARKING NOTES:
1. NEW ABRASIVE TREAD STRIPE @ EVERY TREAD & LANDING (EXTERIOR).
2. PAINTED COLOR CONTRASTING MARKING W/ SLIP RESISTANT FINISH MATERIAL (TYP).
3. STAIR TREADS & STRIP FINISH MATERIAL TO BE SLIP RESISTANT.
4. WHERE CARPET OR ANY OTHER FINISH MATERIAL (OTHER THAN STEEL OR CONCRETE) OCCURS USE 2" WIDE CONTRASTING COLOR OF THE SAME MATERIAL.
5. ALL LANDINGS SHALL HAVE A NON-SLIP SURFACE.

1 Stairways

SECTION 504

PLOTTED: 7/29/2025 9:49 AM

APD ENGINEERING ARCHITECTURE
615 Fishers Run Victor, NY 14564
585.742.2222 - www.apd.com

Copyright © 2024
APD Engineering & Architecture
615 Fishers Run
Victor, NY 14564

Drawing Alteration

It is a violation of law for any person, unless acting under the direction of licensed Architect, Professional Engineer, Landscape Architect, or Land Surveyor to alter any item on this document in any way. Any licensee who alters this document is required by law to affix his or her seal and to add the notation "Altered By" followed by his or her signature and the specific description of the alteration or revision.

DO NOT SCALE PLANS

Copying, Printing, Software and other processes required to produce these prints can stretch or shrink the actual paper or layout. Therefore, scaling of this drawing may be inaccurate. Contact APD E&A with any need for additional dimensions or clarifications.

Issued:		Date:
A	Issued for Permit	07/08/24
B	Issued for Bid	07/29/25
C		
D		
E		

Revisions:		Date:
1	Owner Changes	11/18/24
2	Owner Changes	07/29/25
3		
4		
5		
6		
7		
8		
9		
10		
11		
12		

PROJECT ARCHITECT/ENGINEER
Daniel Sargent

PROJECT LEAD
John Lynch

FOR REFERENCE ONLY

NOT FOR CONSTRUCTION

Seal | Seal

ALDI Inc.
1171 North State Road 7
Royal Palm Beach, FL 33411
(561) 640-8000

ALDI Inc. Store #: 50
Coconut Crossing, FL
12850 Northlake Boulevard
Palm Beach Gardens, FL 33412
Palm Beach County

Project Name & Location:

Accessibility Details

Drawing Name:

Prototype: V7.08 LHRD	Project No. 22-0267A
Type: GROUND UP	
Drawn By: JWL	G-003
Scale: As Noted	Drawing No.

CODE REFERENCES ARE PER 2023 FBC - ACCESSIBILITY 8TH EDITION.
REFER TO NOTED SECTIONS FOR MORE INFORMATION.

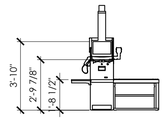

CHECK-OUT AISLES	
NUMBER OF CHECK-OUT AISLES OF EACH FUNCTION	MINIMUM NUMBER OF CHECK-OUT AISLES OF EACH FUNCTION REQUIRED TO COMPLY WITH ANSI A117.(#904)
1 - 4	1
5 - 8	2
9 - 15	3
16+	3, PLUS 20% OF ADDITIONAL AISLES

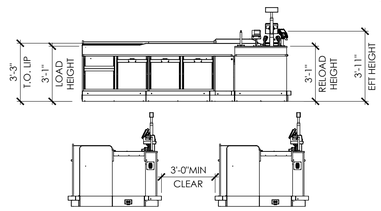

NOTES:
1. ALL PROVIDED CHECKLANES ARE ACCESSIBLE, AND THUS ARE NOT REQUIRED TO BE IDENTIFIED BY ANY ADDITIONAL SIGNAGE
2. NO WRITING SURFACE IS REQUIRED AS STORES DO NOT ACCEPT PERSONAL CHECKS.

6 Checklane
SECTION 904

BASIS OF DESIGN FOR INTERIOR SIGNAGE
MANUFACTURER: INPRO
COLLECTION: ASPEN
MATERIAL: PALLADIUM
FACE COLOR: 0134 CADET BLUE
TEXT COLOR: 0101 DESIGNER WHITE

CONTACT: CARRIE WOJCIK
NATIONAL ACCOUNT MANAGER SPACES
OFFICE 262-679-9010 X5594
CELL (262) 949 4932
FAX (888) 715-8407
EMAIL CWOJCIK@INPROCORP.COM

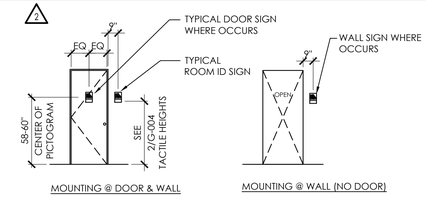

NOTES:
1. DOOR SIGN: SHALL BE CENTERED ON DOOR & MOUNTED 58-60" ABOVE THE FLOOR (W/ADHESIVE ONLY- CAULK EDGES W/CLEAR SILICONE) @ THE CENTER OF THE SIGN.
2. ROOM SIGN: RAISED & BRAILLED CHARACTERS & PICTORIAL SYMBOL SIGNS (PICTOGRAMS). LETTERS & NUMERALS SHALL BE RAISED 1/32", UPPERCASE, SANS SERIF OR SIMPLE SERIF TYPE, & SHALL BE ACCOMPANIED WITH GRADE 2 BRAILLE. RAISED CHARACTERS SHALL BE 5/8" HIGH MIN, 2" HIGH MAX.
3. FINISH CONTRAST: THE CHARACTERS & BACKGROUND OF SIGNS SHALL BE EGGSHELL, MATTE, OR OTHER NON-GLARE FINISH.
4. CHARACTERS & SIGNS: SHALL BE INSTALLED ON THE WALL ADJACENT TO THE LATCH SIDE OF THE DOOR.

2 Signage - Sanitary Facilities
SECTION 703

SYMBOL DESCRIPTION
ON DOORWAYS LEADING TO UNISEX ALL GENDER SANITARY FACILITIES THERE SHALL BE A 1/4" THICK & 12" DIAMETER CIRCLE WITH A 12" TRIANGLE SUPERIMPOSED UPON IT. THESE GEOMETRIC SYMBOLS SHALL BE CENTERED ON THE DOOR @ A HEIGHT OF 58-60" & THEIR COLOR & CONTRAST SHALL BE DISTINCTLY DIFFERENT FROM THE COLOR & CONTRAST OF THE DOOR.

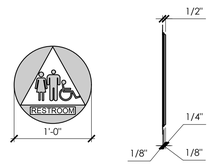

NOTE:
REFER TO A2/A-215 FOR RESTROOM SIGNAGE LOCATIONS.

4 Signage - Sanitary Facilities
SECTION 703

NOTES:
1. MOUNT SIGN SO THAT THE BASELINE OF THE LOWEST TACTILE CHARACTERS ARE LOCATED 48" (MIN.) A.F.F. AND THE BASELINE OF THE HIGHEST TACTILE CHARACTERS ARE LOCATED 60" (MAX.) A.F.F.
2. SIGN SHALL MEET ALL REQUIREMENTS OF THE 2020 FBC - ACCESSIBILITY, 7TH EDITION CODE.
3. CHARACTER SHALL BE SELECTED FROM FONTS WHERE THE WIDTH OF THE UPPERCASE LETTER "O" IS 55% MINIMUM AND 110% MAXIMUM OF THE HEIGHT OF THE UPPERCASE LETTER "I".
4. CHARACTER HEIGHT MEASURED VERTICALLY FROM THE BASELINE OF THE CHARACTER SHALL BE 5/8" MINIMUM AND 2" MAXIMUM BASED ON THE HEIGHT OF THE UPPERCASE "I".
5. STROKE THICKNESS OF THE UPPERCASE LETTER "I" SHALL BE 15% OF THE MAXIMUM HEIGHT OF THE CHARACTER.
6. CHARACTERS AND THEIR BACKGROUNDS SHALL HAVE A NON-GLARE FINISH. CHARACTERS SHALL CONTRAST WITH THEIR BACKGROUND, WITH EITHER LIGHT CHARACTERS ON A DARK BACKGROUND OR DARK CHARACTERS ON A LIGHT BACKGROUND.
7. PICTOGRAMS AND THEIR FIELD SHALL HAVE A NON-GLARE FINISH. PICTOGRAMS SHALL CONTRAST WITH THEIR FIELD, WITH EITHER LIGHT PICTOGRAM ON A DARK FIELD OR DARK PICTOGRAM ON A LIGHT FIELD.
8. SYMBOLS OF ACCESSIBILITY AND THEIR BACKGROUNDS SHALL HAVE A NON-GLARE FINISH. SYMBOLS OF ACCESSIBILITY SHALL CONTRAST WITH THEIR BACKGROUND, WITH EITHER LIGHT CHARACTERS ON A DARK BACKGROUND OR DARK CHARACTERS ON A LIGHT BACKGROUND.
9. RAISED CHARACTERS AND SHALL COMPLY WITH THE FOLLOWING TO THE FOLLOWING:
   A. RAISED CHARACTERS SHALL BE 1/32" MINIMUM ABOVE THEIR BACKGROUND. AND SHALL BE SANS-SERIF UPPERCASE CHARACTERS ACCOMPANIED BY GRADE 2 BRAILLE. CHARACTERS SHALL NOT BE ITALIC, OBLIQUE, SCRIPT, HIGHLY DECORATIVE, OR OF OTHER UNUSUAL FORMS.
   B. CHARACTER HEIGHT MEASURED VERTICALLY FROM THE BASELINE OF THE CHARACTER SHALL BE 5/8" MINIMUM AND 2" MAXIMUM BASED ON THE HEIGHT OF AN UPPERCASE "I".
10. PICTOGRAMS SHALL HAVE A FIELD HEIGHT OF 6" MINIMUM. CHARACTERS AND BRAILLE SHALL NOT BE LOCATED IN THE PICTOGRAM FIELD.
11. PICTOGRAMS SHALL HAVE TEXT DESCRIPTORS LOCATED BELOW THE PICTOGRAM FIELD.
12. BRAILLE SHALL BE CONTRACTED (GRADE 2). BRAILLE DOTS SHALL BE CIRCULAR OR ROUNDED SHAPE AND COMPLY WITH THE FOLLOWING:
   a. DOT BASE DIAMETER SHALL BE 0.059" TO 0.063".
   b. DISTANCE BETWEEN TWO DOTS IN THE SAME CELL SHALL BE 0.090" TO 0.100"
   c. DISTANCE BETWEEN CORRESPONDING DOTS IN ADJACENT CELLS SHALL BE 0.300".
   d. DOT HEIGHT SHALL BE 0.025" TO 0.037".
   e. DISTANCE BETWEEN CORRESPONDING DOTS FROM ONE CELL DIRECTLY BELOW SHALL BE 0.395" TO 0.400".

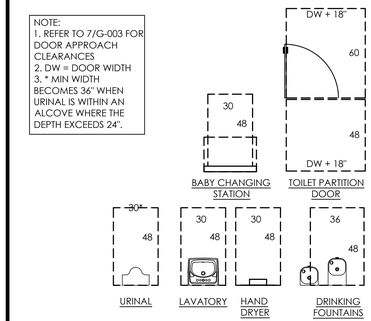

NOTE:
1. REFER TO 7/G-003 FOR DOOR APPROACH CLEARANCES
2. DW = DOOR WIDTH
3. * MIN WIDTH BECOMES 36" WHEN URINAL IS WITHIN AN ALCOVE WHERE THE DEPTH EXCEEDS 24".

8 Fixture Clear Floor Area
SECTION 305

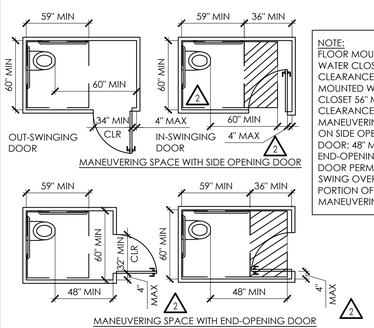

NOTE:
FLOOR MOUNTED WATER CLOSET 59" MIN CLEARANCE. WALL MOUNTED WATER CLOSET 56" MIN CLEARANCE. 60" MIN MANEUVERING SPACE ON SIDE OPENING DOOR; 48" MIN ON END-OPENING DOOR. DOOR PERMITTED TO SWING OVER HATCHED PORTION OF MANEUVERING SPACE.

7 Maneuvering Space
SECTION 604.8

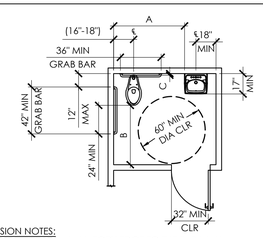

DIMENSION NOTES:
A. 60" CLR MIN FROM LAVATORY EDGE TO THE FAR WALL.
B. 48" MIN TO ENTRY DOOR.
C. THE SPACE BETWEEN THE WALL AND GRAB BAR SHALL BE 1 1/2".

NOTE:
1. PROVIDE PRIVACY DOOR LOCK WHEN IS A PRIVATE TOILET OF FOR UNISEX USE
2. GRAB BARS (REFER TO 9/ G-004)

5 Single Occupancy Toilet
SECTIONS 304; 305; 306; 603; 604; 606

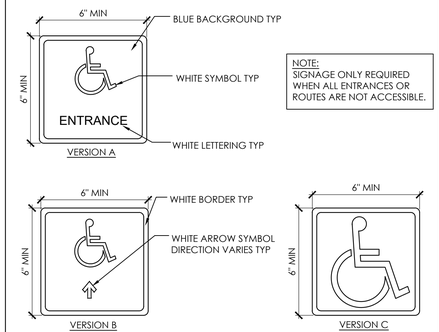

NOTE:
SIGNAGE ONLY REQUIRED WHEN ALL ENTRANCES OR ROUTES ARE NOT ACCESSIBLE.

3 Signage - Entrance/Exit
SECTION 703

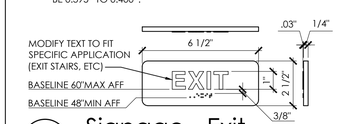

1 Signage - Exit
SECTION 703

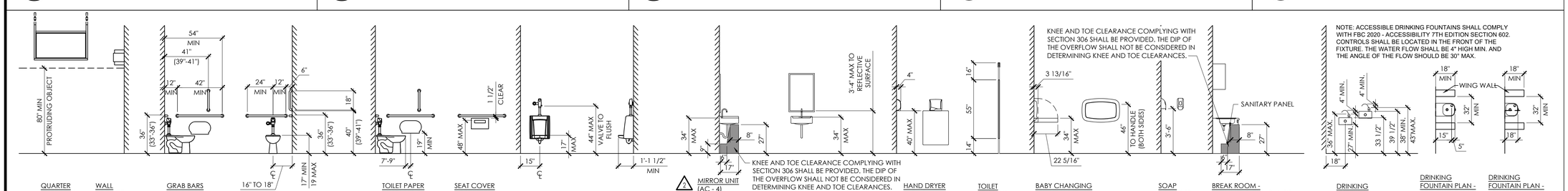

NOTE: THE SPACE BETWEEN THE GRAB BAR AND PROTRUDING OBJECTS BELOW AND AT THE ENDS SHALL BE 1 1/2". THE SPACE BETWEEN THE GRAB BAR AND PROTRUDING OBJECTS ABOVE SHALL BE 12" MINIMUM.

NOTE: WATER SUPPLY AND DRAIN PIPES UNDER LAVATORIES AND SINKS SHALL BE INSTALLED OR OTHERWISE CONFIGURED TO PROTECT AGAINST CONTACT. THERE SHALL BE NO ABRASIVE SURFACES UNDER LAVATORIES AND SINKS. FBC 2020 - ACCESSIBILITY 7TH EDITION SECTION 606.5. REFER TO SPEC SECTION 102800.

NOTE: SHALL NOT BE LOCATED WITHIN TOILET COMPARTMENTS OF MULTIPLE USER RESTROOMS.

NOTE: ALL DRINKING FOUNTAINS SHALL BE LOCATED COMPLETELY WITHIN ALCOVES, POSITIONED COMPLETELY BETWEEN WING WALLS, OR OTHERWISE POSITIONED SO AS TO NOT ENCROACH INTO PEDESTRIAN WAYS MORE THAN 4".

GENERAL NOTE: ALL TOILET ROOM ACCESSORIES MUST CONFORM TO FBC 2020 - ACCESSIBILITY 7TH EDITION SECTION 309. OPERABLE PARTS SHALL BE OPERABLE WITH ONE HAND AND SHALL NOT REQUIRE TIGHT GRASPING, PINCHING, OR TWISTING OF THE WRIST. THE FORCE REQUIRED TO ACTIVATE OPERABLE PARTS SHALL NOT EXCEED 5LBS.

9 Mounting Heights / Fixture Clearances
SECTIONS 306; 307; 602; 603; 604; 605; 606; 609

PLOTTED: 7/29/2025 9:49 AM

APD ENGINEERING ARCHITECTURE
615 Fishers Run Victor, NY 14564
585.742.2222 - www.apd.com

Copyright © 2024
APD Engineering & Architecture
615 Fishers Run
Victor, NY 14564

Drawing Alteration
It is a violation of law for any person, unless acting under the direction of licensed Architect, Professional Engineer, Landscape Architect, or Land Surveyor to alter any item on this document in any way. Any licensee who alters this document is required by law to affix his or her seal and to add the notation "Altered By" followed by his or her signature and the specific description of the alteration or revision.

DO NOT SCALE PLANS
Copying, Printing, Software and other processes required to produce these prints can stretch or shrink the actual paper or layout. Therefore, scaling of this drawing may be inaccurate. Contact APD E&A with any need for additional dimensions or clarifications.

Issued:		Date:
A	Issued for Permit	07/08/24
B	Issued for Bid	07/29/25
C		
D		
E		

Revisions:		Date:
1	Owner Changes	11/18/24
2	Owner Changes	07/29/25
3		
4		
5		
6		
7		
8		
9		
10		
11		
12		

PROJECT ARCHITECT/ENGINEER
Daniel Sargent

PROJECT LEAD
John Lynch

FOR REFERENCE ONLY
NOT FOR CONSTRUCTION

Seal | Seal

ALDI Inc.
1171 North State Road 7
Royal Palm Beach, FL 33411
(561) 640-8000

ALDI Inc. Store #: 50
Coconut Crossing, FL
12850 Northlake Boulevard
Palm Beach Gardens, FL 33412
Palm Beach County
Project Name & Location:

Accessibility Details
Drawing Name:

Prototype: V7.08 LHRD	Project No. 22-0267A
Type: GROUND UP	
Drawn By: JWL	G-004
Scale: As Noted	Drawing No.

RESPONSIBILITY SCHEDULE

SPEC SECTION	ELEMENT	NATIONAL ACCOUNT PRICING	EXISTING	ALDI FURNISHED	ALDI INSTALLED	ALDI COORDINATE	GENERAL CONTRACTOR FURNISHED	GENERAL CONTRACTOR INSTALLED	GENERAL CONTRACTOR COORDINATE	LAND LORD FURNISHED	LAND LORD INSTALLED	LAND LORD COORDINATE	REMARKS
DIVISION 01 - GENERAL REQUIREMENTS													
017700	CLOSEOUT PROCEDURES	--	--	--	--	--	X	--	--	--	--	--	GC TO COMPLETE TABLE OF CONTENTS DOCUMENT FOR CLOSEOUT BINDER
017839	PROJECT RECORD DOCUMENTS	--	--	--	--	--	X	--	--	--	--	--	GC TO COMPLY WITH REQUIREMENTS OF THIS SECTION
019100	COMMISSIONING REQUIREMENTS	X	--	X	--	--	--	--	X	--	--	--	COMMISSIONING AGENT FOR REFRIGERATION (EMERSON OR ENREPS) AND SIEMENS EMS (SIEMENS) CONTRACTED DIRECTLY BY ALDI. GC AND SUBCONTRACTORS TO BE ON SITE WHEN REQUIRED AND ASSIST WITH COMMISSIONING AND FINAL FUNCTIONAL TESTING.
DIVISION 03 - CONCRETE													
033000	CAST-IN-PLACE CONCRETE	--	--	--	--	--	X	--	--	--	--	--	
033170	INTERIOR CONCRETE SLAB ON GRADE JOINT SEALANTS	--	--	--	--	--	X	--	--	--	--	--	
DIVISION 04 - MASONRY													
042000	UNIT MASONRY												SEE A202
	CAST STONE WALL CAP		--	--	--	--	X	X	--	--	--	--	SEE A201 & A202 EXTERIOR FINISH SCHEDULE
047300	MANUFACTURED STONE VENEER	--	--	--	--	--	X	X	--	--	--	--	CULTURED STONE: BORAL
DIVISION 05 - METALS													
055000	METAL FABRICATIONS												
	ANODIZED ALUMINUM ENTRY DOOR PROTECTORS	--	--	--	--	--	X	X	--	--	--	--	TARPENING - LAFOLLETTE CO
	BLRD-1: FLEXCORE	X	--	--	--	--	X	X	--	--	--	--	MCCUE CORPORATION
	BLRD-4: CG-8106 BK CHROMA HSE PE	X	--	--	--	--	X	X	--	--	--	--	MCCUE CORPORATION
	BR: FLOOR MOUNTED STAINLESS STEEL RAIL	X	--	--	--	--	X	X	--	--	--	--	MCCUE CORPORATION
	BR-C: FLOOR MOUNTED CORNER GUARD	X	--	--	--	--	X	X	--	--	--	--	MCCUE CORPORATION
	ROOF ACCESS LADDER	--	--	--	--	--	X	X	--	--	--	--	STEEL LADDER: SEE PROJECT MANUAL FOR REQUIREMENTS PREFABRICATED ALUMINUM LADDER (OPTIONAL): UPNOVR CAGE IS REQUIRED FOR LADDERS OVER 20' HIGH PER OSHA REQUIREMENTS
	SSBR: STAINLESS STEEL BUMPER RAIL	--	--	--	--	--	X	X	--	--	--	--	TARPENING - LAFOLLETTE CO
057000	DECORATIVE METAL												
	COLUMN COVERS	--	--	--	--	--	X	X	--	--	--	--	TARPENING - LAFOLLETTE CO
DIVISION 06 - WOOD, PLASTICS, AND COMPOSITES													
066400	PLASTIC PANELING	--	--	--	--	--	X	X	--	--	--	--	SEE PROJECT MANUAL FOR LIST OF APPROVED MANUFACTURERS
DIVISION 07 - THERMAL AND MOISTURE PROTECTION													
072100	THERMAL INSULATION	--	--	--	--	--	X	X	--	--	--	--	FOAM-PLASTIC BOARD INSULATION: SEE PROJECT MANUAL FOR LIST OF APPROVED MANUFACTURERS GLASS-FIBER BLANKET INSULATION: SEE PROJECT MANUAL FOR LIST OF APPROVED MANUFACTURERS POLYURETHANE SPRAY FOAM INSULATION: ICYNENE INC. OR DEMILEC INC.
074213	METAL SOFFIT PANELS	--	--	--	--	--	X	X	--	--	--	--	METAL SOFFIT PANELS: PETERSEN ALUMINUM CORPORATION (PAC) OR FIRESTONE BUILDING PRODUCTS THIS ITEM MAY BE PROVIDED BY OWNER - COORDINATE ROOFING SCOPE OF WORK WITH OWNER
074243	COMPOSITE WALL PANELS	X	--	--	--	--	X	X	--	--	--	--	ALUMINUM COMPOSITE PANEL: LAMINATOR'S INC.
074646	FIBER CEMENT WALL PANELS	X	--	--	--	--	X	X	--	--	--	--	FIBER CEMENT WALL PANELS: NICHIHA USA INC.
076201	SHEET METAL FLASHING AND TRIM												
079999	ALDI GC ROOFING INSTRUCTIONS	--	--	--	--	--	X	X	X	--	--	--	REFER TO APPENDIX 'B' FOR ROOF SCOPE OF WORK. WHEN APPLICABLE, PHOTOVOLTAIC SYSTEM WILL BE PROVIDED BY ALDI VENDOR. GC IS TO COORDINATE WITH SOLAR CONTRACTOR AND ROOFING VENDOR.
DRAWING	PIPE BOOT CURB	--	--	--	--	--	X	X	--	--	--	--	PATE COMPANY, THE OR ROOF PRODUCTS AND SYSTEMS (RPS)
DRAWING	UNIT CURB	--	--	--	--	--	X	X	--	--	--	--	PATE COMPANY, THE OR ROOF PRODUCTS AND SYSTEMS (RPS)
DIVISION 08 - OPENINGS													
083613	SECTIONAL OH DOORS						X	X					
083800	IMPACT TRAFFIC DOORS	X	--	--	--	--	X	X	--	--	--	--	CHASE DOORS (SENNECA HOLDINGS)
088000	GLAZING	--	--	--	--	--	X	X	--	--	--	--	VERIFY GLAZING TYPE WITH CLIMATE ZONE SEE PROJECT MANUAL FOR LIST OF APPROVED MANUFACTURERS
DIVISION 09 - FINISHES													
093000	TILING												
	GLAZED OR PORCELAIN	X	--	--	--	--	X	X	--	--	--	--	CERAMIC TILE: DALTILE / AMERICAN OLEAN
095113	ACOUSTICAL PANEL CEILINGS												
	ACOUSTICAL PANEL CEILING SYSTEM	X	--	--	--	--	X	X	--	--	--	--	ARMSTRONG WORLD INDUSTRIES, INC. 2
096513	RESILIENT BASE AND ACCESSORIES												
	VB-1: VINYL BASE	--	--	--	--	--	X	X	--	--	--	--	ROPPE CORPORATION
099100	PAINTING	X	--	--	--	--	X	X	--	--	--	--	PAINT: SHERWIN-WILLIAMS
DRAWING	WP-1: WOOD PANELS	X	--	--	--	--	X	X	--	--	--	--	ARCHSYSTEMS OR HARDWARE BARGAINS RE: INTERIOR ELEVATIONS

RESPONSIBILITY SCHEDULE

SPEC SECTION	ELEMENT	NATIONAL ACCOUNT PRICING	EXISTING	ALDI FURNISHED	ALDI INSTALLED	ALDI COORDINATE	GENERAL CONTRACTOR FURNISHED	GENERAL CONTRACTOR INSTALLED	GENERAL CONTRACTOR COORDINATE	LAND LORD FURNISHED	LAND LORD INSTALLED	LAND LORD COORDINATE	REMARKS
DIVISION 10 - SPECIALTIES													
101400	SIGNAGE												
	HANDICAPPED PARKING	--	--	--	--	--	X	X	--	--	--	--	--
	REST ROOM & ENTRY EXIT	--	--	--	--	--	X	X	--	--	--	--	INPRO - CONTACT: JOHN KAISER, JKAISER@INPROCORP.COM, 800-222-5556 X.5468 RE: G-004
102600	WALL, DOOR AND EQUIPMENT PROTECTION												
	GUIDANCE RAILING	X	--	--	--	--	X	X	--	--	--	--	MCCUE CORPORATION
	EQUIPMENT GUARDRAIL	X	--	--	--	--	X	X	--	--	--	--	MCCUE CORPORATION
102800	TOILET, BATH AND LAUNDRY ACCESSORIES												
	AC-1: BABY CHANGING STATION	X	--	--	--	--	X	X	--	--	--	--	KOALA KARE PRODUCTS
	AC-2: PAPER TOWEL DISPENSER	--	--	--	--	--	X	X	--	--	--	--	SIMPLEHUMAN
	AC-3: GRAB BAR	--	--	--	--	--	X	X	--	--	--	--	BOBRICK WASHROOM EQUIPMENT, INC. OR BRADLEY CORPORATION
	AC-4: MIRROR UNIT	--	--	--	--	--	X	X	--	--	--	--	BOBRICK WASHROOM EQUIPMENT, INC. OR BRADLEY CORPORATION
	AC-5: HAND DRYER AND WALL GUARD	X	--	--	--	--	X	X	--	--	--	--	EXCEL DRYER INC.
	AC-6: UNDERLAVATORY GUARD	--	--	--	--	--	X	X	--	--	--	--	PLUMBEREX SPECIALTY PRODUCTS, INC. OR IPS CORPORATION
102813	MISCELLANEOUS ACCESSORIES												
	DISPLAY MOUNTING RAIL	--	--	--	--	--	X	X	--	--	--	--	ADVANTUS GRIP-A-STRIP. LOCATED IN BREAK ROOM. COORDINATE FINAL LOCATION WITH ALDI CONSTRUCTION REPRESENTATIVE
104416	FIRE EXTINGUISHERS	--	--	--	--	--	X	X	X	--	--	--	SEE PROJECT MANUAL FOR LIST OF APPROVED MANUFACTURERS MOUNT IN COMPLIANCE WITH REQUIREMENTS OF AUTHORITY HAVING JURISDICTION
DRAWING	KNOX BOX	--	--	--	--	--	X	X	X	--	--	--	MOUNT IN COMPLIANCE WITH REQUIREMENTS OF AUTHORITY HAVING JURISDICTION RE: A-201
DIVISION 11 - EQUIPMENT													
111300	LOADING DOCK EQUIPMENT												
	DOCK LEVELER AND CONTROLS	--	--	--	--	--	X	X	--	--	--	--	SEE PROJECT MANUAL FOR LIST OF APPROVED MANUFACTURERS 2
	DOCK SEAL	--	--	--	--	--	X	X	--	--	--	--	MARVEL EQUIPMENT COMPANY (MEC)
	DOCK TRACK GUARD	--	--	--	--	--	X	X	--	--	--	--	DURAFLEX
DIVISION 12 - FURNISHINGS													2
124840	FLOOR MATS AND FRAMES	X	--	--	--	--	X	X	--	--	--	--	CONSTRUCTION SPECIALTIES
DRAWING	TR-1: TRASH RECEPTACLE	--	--	--	--	--	X	X	--	--	--	--	DAWN ENTERPRISES RE: A-603
DIVISION 21 - FIRE SUPPRESSION													
210500	COMMON WORK RESULTS FOR FIRE SUPPRESSION	--	--	--	--	--	X	X	--	--	--	--	A CRITERIA DRAWING IS PART OF DRAWING SET. ENGINEERED FIRE SUPPRESSION DRAWINGS TO BE PROVIDED BY GC AND SUBCONTRACTOR AND SUBMITTED TO AHJ FOR REVIEW AND APPROVAL.
DIVISION 22 - PLUMBING													
220500	COMMON WORK RESULTS FOR PLUMBING	--	--	--	--	--	X	X	--	--	--	--	--
DIVISION 23 - HEATING, VENTILATING, AND AIR CONDITIONING													
230500	COMMON WORK RESULTS FOR HVAC	--	--	--	--	--	X	X	--	--	--	--	-- 2
237414	PACKAGED, OUTDOOR, DEHUMIDIFICATION UNIT (RTU-1)												
	RTU-1 ROOF CURB	--	--	--	--	--	X	X	X	--	--	--	AES INDUSTRIES, INC. REFER TO G-006 FOR RTU-1 UNIT, TEMPERATURE AND HUMIDITY SENSOR SCOPE
238126	SPLIT-SYSTEM AIR-CONDITIONERS												
	UNIT CONDENSATE DRAIN	--	--	--	--	--	X	X	--	--	--	--	--
DRAWING	REFRIGERATION CONDENSER SUPPORT CURB	--	--	--	--	--	X	X	--	--	--	--	AES INDUSTRIES, INC.
DIVISION 26 - ELECTRICAL													
260500	COMMON WORK RESULTS FOR ELECTRICAL	--	--	--	--	--	X	X	--	--	--	--	SEE PROJECT MANUAL FOR LIST OF APPROVED MANUFACTURERS
265100	INTERIOR LIGHTING												
	FSG LIGHTING PACKAGE	X	--	--	--	--	X	X	--	--	--	--	FSG LIGHTING
265600	EXTERIOR LIGHTING												
	FSG LIGHTING PACKAGE	X	--	--	--	--	X	X	--	--	--	--	FSG LIGHTING
	IO (EATON) UP LIGHTING	X	--	--	--	--	X	X	--	--	--	--	IO (EATON) LIGHTING
DRAWING	CHIME	--	--	--	--	--	X	X	--	--	--	--	--
DRAWING	POWERPOLE - GONDOLA AND SPOT MERCHANDISER	--	--	--	--	--	X	X	--	--	--	--	--
DIVISION 27 - COMMUNICATIONS													2
DRAWING	ROOF MAST	--	--	--	--	--	X	X	X	--	--	--	GC TO PROVIDE ROOF MAST ASSEMBLY, BALLAST, AND CONDUIT THROUGH ROOF. REFER TO G-007 'DIVISION 27 - COMMUNICATIONS_ROOF MAST - ANTENNA' FOR ANTENNA SCOPE

NOTE:
THE RESPONSIBILITY SCHEDULE IS MEANT TO PROVIDE AN OVERVIEW OF OWNER FURNISHED AND OWNER PROVIDED ITEMS. THIS IS NOT MEANT TO REPLACE THE GC OBLIGATIONS WITHIN THE DRAWINGS AND SPECIFICATIONS.

PLOTTED: 7/29/2025 9:49 AM

APD ENGINEERING ARCHITECTURE
615 Fishers Run Victor, NY 14564
585.742.2222 - www.apd.com

Copyright © 2024
APD Engineering & Architecture
615 Fishers Run
Victor, NY 14564

Drawing Alteration

It is a violation of law for any person, unless acting under the direction of licensed Architect, Professional Engineer, Landscape Architect, or Land Surveyor to alter any item on this document in any way. Any licensee who alters this document is required by law to affix his or her seal and to add the notation "Altered By" followed by his or her signature and the specific description of the alteration or revision.

DO NOT SCALE PLANS

Copying, Printing, Software and other processes required to produce these prints can stretch or shrink the actual paper or layout. Therefore, scaling of this drawing may be inaccurate. Contact APD E&A with any need for additional dimensions or clarifications.

	Issued:	Date:
A	Issued for Permit	07/08/24
B	Issued for Bid	07/29/25
C		
D		
E		

	Revisions:	Date:
1	Owner Changes	11/18/24
2	Owner Changes	07/29/25
3		
4		
5		
6		
7		
8		
9		
10		
11		
12		

PROJECT ARCHITECT/ENGINEER
Daniel Sargent

PROJECT LEAD
John Lynch

NOT FOR CONSTRUCTION

Seal Seal

ALDI Inc.
1171 North State Road 7
Royal Palm Beach, FL 33411
(561) 640-8000

ALDI Inc. Store #: 50
Coconut Crossing, FL 1
12850 Northlake Boulevard
Palm Beach Gardens, FL 33412
Palm Beach County
Project Name & Location:

Responsibility Schedule - Volume 2
Drawing Name:

Prototype: V7.08 LHRD
Type: GROUND UP
Drawn By: JWL
Scale: As Noted
Project No. 22-0267A
Drawing No. G-005

RESPONSIBILITY SCHEDULE

SPEC SECTION	ELEMENT	NATIONAL ACCOUNT PRICING	EXISTING	ALDI FURNISHED	ALDI INSTALLED	ALDI COORDINATE	GENERAL CONTRACTOR FURNISHED	GENERAL CONTRACTOR INSTALLED	GENERAL CONTRACTOR COORDINATE	LAND LORD FURNISHED	LAND LORD INSTALLED	LAND LORD COORDINATE	REMARKS
APPENDIX A - OWNER FURNISHED AND CONTRACTOR INSTALLED SEE APPENDIX A IN THE VENDOR INFORMATION FOLDER ON SHARENOLOGY													
DIVISION 05 - METALS													
DRAWING	SPOT MERCHANDISER BASE PROTECTION	--	--	X	--	--	--	X	--	--	--	--	KPI
052100	ROOF JOIST	--	--	X	--	X	--	X	X	--	--	--	NEW MILLENNIUM - NATIONAL ACCOUNTS PROGRAM MANAGER JILL ENGERMAN JILL.ENGERMAN@NEWMILL.COM (260.969.3502)
053100	ROOF DECK	--	--	X	--	X	--	X	X	--	--	--	NEW MILLENNIUM - NATIONAL ACCOUNTS PROGRAM MANAGER JILL ENGERMAN JILL.ENGERMAN@NEWMILL.COM (260.969.3502)
DIVISION 06 - WOOD, PLASTICS, AND COMPOSITES													
064023	INTERIOR ARCHITECTURAL WOODWORK	X	--	X	--	--	--	X	--	--	--	--	RIDDLEY RETAIL FIXTURES, INC.
DIVISION 08 - OPENINGS													
081113	DOOR AND FRAME	X	--	X	--	--	--	X	--	--	--	--	DH PACE: ALDIDOORS@DHPACE.COM SELECT DOOR FRAMES TO BE PREPARED TO RECEIVE ALARMED EXIT DEVICE EQUIPMENT - REFER TO A-601 FOR APPLICABLE DOOR FRAMES.
087100	DOOR HARDWARE	X	--	X	--	--	--	X	--	--	--	--	DH PACE: ALDIDOORS@DHPACE.COM RE: A-601
DIVISION 10 - SPECIALTIES													
101436	INTERIOR SIGNAGE												
	HANGING 'NO PARKING'	X	--	X	--	--	--	X	--	--	--	--	SBPI GRAPHICS OR OFF THE WALL COMPANY, LLC
	PRODUCE SCREEN WALL	X	--	X	--	--	--	X	--	--	--	--	OFF THE WALL COMPANY, LLC IF SHOWN ON PLANS
	VALANCE MOUNTED	X	--	X	--	--	--	X	--	--	--	--	MULTIDECK UNITS HAVE AN INTEGRAL FASCIA FOR SIGNAGE ATTACHMENT LPB VALANCE LOCATED ABOVE COOLER / FREEZER DOORS (KPI OR RIDDLEY)
	WALL MOUNTED	X	--	X	--	--	--	X	--	--	--	--	SBPI GRAPHICS OR OFF THE WALL COMPANY, LLC
	GRAPHIC SCREEN WALL	X	--	X	--	--	--	X	--	--	--	--	OFF THE WALL COMPANY, LLC LOCATED AT E-COMMERCE
	ECOMMERCE SCREEN WALL	X	--	X	--	--	--	X	--	--	--	--	OFF THE WALL COMPANY, LLC
101400	EXTERIOR SIGNAGE												
	BANNERS - EXTERIOR	X	--	X	--	--	--	X	--	--	--	--	--
10/11 0000	MISCELLANEOUS SPECIALTIES AND EQUIPMENT												
	BATTERY CHARGER	X	--	X	--	--	--	X	--	--	--	--	CROWN EQUIPMENT CORPORATION
	PROJECTOR AND LENS (FOR BACKROOM FLOOR STRIPING IMAGE AT IMPACT DOORS)	X	--	X	--	--	--	X	--	--	--	--	FACILITY SOLUTIONS GROUP
	SAFE	X	--	X	--	--	--	X	--	--	--	--	HAYMAN SAFE
	SAFE BASE	X	--	X	--	--	--	X	--	--	--	--	HAYMAN SAFE
	SPOT MERCHANDISER	X	--	X	--	--	--	X	--	--	--	--	AHT COOLING SYSTEMS USA INC.
	ECOMMERCE AND CLEANING SHELVING, DONATION AND EPW/SS HOLD AREAS	X	--	X	--	--	--	X	--	--	--	--	REB
DIVISION 11 - EQUIPMENT													
113100	RESIDENTIAL APPLIANCES												
	MW-1: MICROWAVE	X	--	X	--	--	--	X	--	--	--	--	MAS DISTRIBUTION - RE: A-603
	DW-1: DISHWASHER	X	--	X	--	--	--	X	--	--	--	--	MAS DISTRIBUTION - RE: A-603
	R-1: REFRIGERATOR	X	--	X	--	--	--	X	--	--	--	--	MAS DISTRIBUTION - RE: A-603
114121	WALK-IN COOLERS AND FREEZERS												
	RACKING	X	--	X	--	--	--	X	--	--	--	--	B-O-F
DRAWING	SHOPPING CARTS	X	--	X	--	--	--	X	--	--	--	--	R.W. ROGERS COMPANY OR TECHNIBILT

RESPONSIBILITY SCHEDULE

SPEC SECTION	ELEMENT	NATIONAL ACCOUNT PRICING	EXISTING	ALDI FURNISHED	ALDI INSTALLED	ALDI COORDINATE	GENERAL CONTRACTOR FURNISHED	GENERAL CONTRACTOR INSTALLED	GENERAL CONTRACTOR COORDINATE	LAND LORD FURNISHED	LAND LORD INSTALLED	LAND LORD COORDINATE	REMARKS
DIVISION 12 - FURNISHINGS													
123200	MANUFACTURED CASEWORK												RIDDLEY RETAIL FIXTURES, INC.
	CABINETS	X	--	X	--	--	--	X	--	--	--	--	KPI OR RIDDLEY
	CHECKLANES	X	--	X	--	--	--	X	--	--	--	--	KPI OR RIDDLEY
	FILE CABINETS	X	--	X	--	--	--	X	--	--	--	--	KPI OR RIDDLEY
	LOCKERS	X	--	X	--	--	--	X	--	--	--	--	KPI OR RIDDLEY
	MANAGER'S ORGANIZATION DESK	X	--	X	--	--	--	X	--	--	--	--	KPI OR RIDDLEY
	SACKING COUNTER AND MOUNTING BRACKET	X	--	X	--	--	--	X	--	--	--	--	KPI OR RIDDLEY
	SALES FLOOR GONDOLAS	X	--	X	--	--	--	X	--	--	--	--	KPI OR RIDDLEY
	SCO WALL	X	--	X	--	--	--	X	--	--	--	--	RIDDLEY
DRAWING	BREAKROOM MIRROR	X	--	X	--	--	--	X	--	--	--	--	
DRAWING	CHECKLANE CHAIRS	X	--	X	--	--	--	X	--	--	--	--	DAUPHIN OR KDI DESIGN (VIA SEATING)
DRAWING	QUARTER CART SIGN	X	--	X	--	--	X	X	X	--	--	--	OWNER FURNISHES GRAPHIC (SBPI GRAPHICS OR OFF THE WALL COMPANY, LLC) GC FURNISHES FRAME (WHEN APPLICABLE)
DIVISION 22 - PLUMBING													
DRAWING	BREAKROOM SINK	--	--	X	--	--	--	X	--	--	--	--	SINK FURNISHED BY OWNER WITH MILLWORK PACKAGE SINK IS PREINSTALLED UNDER COUNTER
DIVISION 23 - HEATING, VENTILATING, AND AIR CONDITIONING													
237413	PACKAGED, OUTDOOR, CENTRAL-STATION ROOFTOP UNITS (RTU-2 & RTU-3)												
	RTU-2	X	--	X	--	--	--	X	X	--	--	--	TRANE
	RTU-3	X	--	X	--	--	--	X	X	--	--	--	TRANE
237414	PACKAGED, OUTDOOR, DEHUMIDIFICATION UNIT (RTU-1)												
	RTU-1	X	--	X	--	--	--	X	X	--	--	--	TRANE REFER TO G-005 FOR RTU-1 ROOF CURB SCOPE
	TEMPERATURE AND HUMIDITY SENSORS	--	--	X	--	--	--	X	X	--	--	--	
238126	SPLIT-SYSTEM AIR-CONDITIONERS												
	DUCTLESS SPLIT-FAN COIL UNIT (FCU-1)	X	--	X	--	--	--	X	X	--	--	--	LG ELECTRONICS U.S.A., INC. RE: MECH DWGS - THIS PIECE OF EQUIPMENT IS ORDERED BY GC, AND ALDI IS DIRECT BILLED FOR COST OF EQUIPMENT. INSTALLATION OF EQUIPMENT UNDER GC CONTRACT.
	HEAT PUMP (HP-1)	X	--	X	--	--	--	X	X	--	--	--	LG ELECTRONICS U.S.A. INC. RE: MECH DWGS - THIS PIECE OF EQUIPMENT IS ORDERED BY GC, AND ALDI IS DIRECT BILLED FOR COST OF EQUIPMENT. INSTALLATION OF EQUIPMENT UNDER GC CONTRACT.
DIVISION 26 - ELECTRICAL													
265100	NORDEON INTERIOR LIGHTING - TRUNK SYSTEM	X	--	X	--	--	--	X	X	--	--	--	NORDEON USA
DRAWING	POWERPOLE - CHECKLANE	X	--	X	--	--	--	X	--	--	--	--	KPI OR RIDDLEY
DRAWING	INTEGRATED POWER SUPPLY (FORMERLY POWERWALL)	X	--	X	--	--	--	X	X	--	--	--	CUSTOM DESIGN CONTROLS

NOTE:
THE RESPONSIBILITY SCHEDULE IS MEANT TO PROVIDE AN OVERVIEW OF OWNER FURNISHED AND OWNER PROVIDED ITEMS. THIS IS NOT MEANT TO REPLACE THE GC OBLIGATIONS WITHIN THE DRAWINGS AND SPECIFICATIONS.

PLOTTED: 7/29/2025 9:49 AM

APD ENGINEERING ARCHITECTURE
615 Fishers Run Victor, NY 14564
585.742.2222 - www.apd.com

Copyright © 2024
APD Engineering & Architecture
615 Fishers Run
Victor, NY 14564

Drawing Alteration
It is a violation of law for any person, unless acting under the direction of licensed Architect, Professional Engineer, Landscape Architect, or Land Surveyor to alter any item on this document in any way. Any licensee who alters this document is required by law to affix his or her seal and to add the notation "Altered By" followed by his or her signature and the specific description of the alteration or revision.

DO NOT SCALE PLANS
Copying, Printing, Software and other processes required to produce these prints can stretch or shrink the actual paper or layout. Therefore, scaling of this drawing may be inaccurate. Contact APD E&A with any need for additional dimensions or clarifications.

Issued:		Date:
A	Issued for Permit	07/08/24
B	Issued for Bid	07/29/25
C		
D		
E		

Revisions:		Date:
1	Owner Changes	11/18/24
2	Owner Changes	07/29/25
3		
4		
5		
6		
7		
8		
9		
10		
11		
12		

PROJECT ARCHITECT/ENGINEER
Daniel Sargent
PROJECT LEAD
John Lynch

NOT FOR CONSTRUCTION

Seal | Seal

ALDI Inc.
1171 North State Road 7
Royal Palm Beach, FL 33411
(561) 640-8000

ALDI Inc. Store #: 50
Coconut Crossing, FL
12850 Northlake Boulevard
Palm Beach Gardens, FL 33412
Palm Beach County
Project Name & Location:

Responsibility Schedule - Appendix A
Drawing Name:

Prototype: V7.08 LHRD
Type: GROUND UP
Drawn By: JWL
Scale: As Noted
Project No. 22-0267A
G-006
Drawing No.

RESPONSIBILITY SCHEDULE

SPEC SECTION	ELEMENT	NATIONAL ACCOUNT PRICING	EXISTING	ALDI FURNISHED	ALDI INSTALLED	ALDI COORDINATE	GENERAL CONTRACTOR FURNISHED	GENERAL CONTRACTOR INSTALLED	GENERAL CONTRACTOR COORDINATE	LAND LORD FURNISHED	LAND LORD INSTALLED	LAND LORD COORDINATE	REMARKS
APPENDIX B - OWNER PROVIDED (FURNISHED AND INSTALLED) SEE APPENDIX B IN THE VENDOR INFORMATION FOLDER ON SHARENOLOGY													
DIVISION 03 - CONCRETE													
033544	DIAMOND POLISHED CONCRETE FINISHING	X	--	X	X	--	--	--	X	--	--	--	COORDINATE WITH ALDI CONSTRUCTION REPRESENTATIVE
DIVISION 07 - THERMAL AND MOISTURE PROTECTION													
075416	KEE ROOFING	--	--	X	X	--	--	--	X	--	--	--	FIBERTITE; KEE ROOFING
	ROOF INSULATION	--	--	X	X	--	--	--	X	--	--	--	SEE THERMAL INSULATION SCHEDULE ON A-603 FOR DESIRED R-VALUE
075419	PVC ROOFING	--	--	X	X	--	--	--	X	--	--	--	--
	ROOF INSULATION	--	--	X	X	--	--	--	X	--	--	--	SEE THERMAL INSULATION SCHEDULE ON A-603 FOR DESIRED R-VALUE
076200	SHEET METAL FLASHING AND TRIM	--	--	X	X	--	--	--	X	--	--	--	DRIP EDGE AND FASCIA CAP; SEE ROOFER'S SCOPE OF WORK
	SCUPPER	--	--	X	X	--	--	--	X	--	--	--	SEE ROOFER'S SCOPE OF WORK
077200	ROOF ACCESSORIES												
	ROOF HATCH WALKWAY PADS	--	--	X	X	--	--	--	X	--	--	--	--
	ROOF HATCH	--	--	X	X	--	--	--	X	--	--	--	BABCOCK-DAVIS
	ROOF HATCH SAFETY RAILING SYSTEM	--	--	X	X	--	--	--	X	--	--	--	SAFEPRO SAFETY
DIVISION 08 - OPENINGS													
084229	AUTOMATIC ENTRANCES												
	AUTODOOR SYSTEM AND TRANSOM FRAMING	X	--	X	X	--	--	--	X	--	--	--	AUTOMATIC ENTRANCE DOOR SYSTEM: STANLEY ACCESS TECHNOLOGIES. AUTO DOOR SYSTEM IS FURNISHED & INSTALLED BY ALDI. TRANSOM FRAMING IS FURNISHED AND INSTALLED BY GC.GC TO CONFIRM WITH OWNER THAT DOOR SUPPLIER VERIFIES R.O. SIZE BEFORE FABRICATION OF DOORS.
	GLAZING IN AUTODOOR AND TRANSOM	--	--	--	--	--	X	X	X	--	--	--	GLAZING FOR BI-PARTING ENTRANCE DOOR IS FURNISHED & INSTALLED WITH THE DOOR BY ALDI. ALL OTHER GLAZING FURNISHED AND INSTALLED BY GC
	ECOMMERCE DOOR OPERATOR	X	--	X	X	--	--	--	X	--	--	--	
DIVISION 09 - FINISHES													
		--	--	--	--	--	--	--	--	--	--	--	
DIVISION 10 - SPECIALTIES													
101400	EXTERIOR SIGNAGE												
	LOGO	X	--	X	X	--	--	--	X	--	--	--	PERSONA SIGN
	MONUMENT / PYLON	X	--	X	X	--	--	--	X	--	--	--	PERSONA SIGN
102800	TOILET, BATH AND LAUNDRY ACCESSORIES												
	TOILET PAPER DISPENSER	--	--	X	X	--	--	--	X	--	--	--	--
	SOAP DISPENSER	--	--	X	X	--	--	--	X	--	--	--	--
10/11 0000	MISCELLANEOUS SPECIALTIES AND EQUIPMENT												
	SMART SAFE	X	--	X	--	--	--	X	--	--	--	--	LOOMIS

RESPONSIBILITY SCHEDULE

SPEC SECTION	ELEMENT	NATIONAL ACCOUNT PRICING	EXISTING	ALDI FURNISHED	ALDI INSTALLED	ALDI COORDINATE	GENERAL CONTRACTOR FURNISHED	GENERAL CONTRACTOR INSTALLED	GENERAL CONTRACTOR COORDINATE	LAND LORD FURNISHED	LAND LORD INSTALLED	LAND LORD COORDINATE	REMARKS
DIVISION 11 - EQUIPMENT													
114000	FOODSERVICE EQUIPMENT												
	COMPRESSOR/CONDENSER	X	--	X	X	--	--	--	X	--	--	--	GC TO PROVIDE STRUCTURAL SUPPORT FOR EQUIPMENT MOUNTING SEE REFRIGERATION DRAWINGS FOR ADDITIONAL REQUIREMENTS
	COOLER/FREEZER - DOOR - CUSTOMER	X	--	X	X	--	--	--	X	--	--	--	THERMOSEAL
	COOLER/FREEZER - DOOR - SERVICE	X	--	X	X	--	--	--	X	--	--	--	--
	COOLER/FREEZER - EVAPORATORS	X	--	X	X	--	--	--	--	--	--	--	--
	COOLER/FREEZER - LIGHTING	X	--	--	X	--	X	--	--	--	--	--	COOLER AND FREEZER LIGHTING FURNISHED BY GC AND INSTALLED BY REFRIGERATION CONTRACTOR
	COOLER/FREEZER - OCCUPANCY SENSORS	--	--	X	X	--	--	--	--	--	--	--	--
	COOLER/FREEZER - WALK-IN BOX	X	--	X	X	--	--	--	X	--	--	--	--
	FLOOR SCRUBBER	X	--	X	X	--	--	--	--	--	--	--	TENNANT
	MULTI-DECK UNIT	X	--	X	X	--	--	--	--	--	--	--	SEE REFRIGERATION DRAWINGS FOR VENDOR
	MULTI-DECK UNIT - FILLER PANEL	--	--	X	X	--	--	--	--	--	--	--	--
	PALLET JACKS / STACKERS	X	--	X	X	--	--	--	--	--	--	--	CROWN, RAYMOND, OR GLOBAL INDUSTRIAL ETC.
	REFRIGERATION EQUIPMENT DISCONNECT	--	--	--	--	--	X	X	--	--	--	--	--
	REFRIGERATION REMOTE PANEL	--	--	X	X	--	--	--	X	--	--	--	SEE REFRIGERATION DRAWINGS IF APPLICABLE
DRAWING	SCO (SELF CHECKOUT) UNIT	--	--	X	X	--	--	--	X	--	--	--	DIEBOLD NIXDORF CONTRACTOR RESPONSIBLE FOR PROVIDING POWER AND DATA CONNECTION POINTS TO UNIT VIA POWERPOLES AND/OR WALL CHASE
DRAWING	WASTE COMPACTOR AND DESTRUCTORS												
	BALER	X	--	X	X	--	--	--	X	--	--	--	BACE
	BALER DISCONNECT SWITCH	--	--	--	--	--	X	X	--	--	--	--	COORDINATE FINAL DISCONNECT LOCATION TO BE ON POWER SUPPLY SIDE OF BALER
DIVISION 23 - HVAC													
	IAQ IONIZATION UNIT	X	--	X	X	--	--	--	X	--	--	--	UNIT TO BE SHIPPED W/ SIEMENS INDUSTRY, INC ORDER AND INSTALLED BY REFRIGERATION CONTRACTOR
DIVISION 25 - INTEGRATED AUTOMATION													
DRAWING	ENERGY MANAGEMENT SYSTEM												
	HVAC	X	--	X	X	--	--	--	X	--	--	--	SIEMENS INDUSTRY, INC.
	LIGHTING	X	--	X	X	--	--	--	X	--	--	--	SIEMENS INDUSTRY, INC.
	REFRIGERATION	X	--	X	X	--	--	--	X	--	--	--	DANFOSS
DIVISION 27 - COMMUNICATIONS													
DRAWING	I.T. RACK	--	--	X	X	--	--	--	X	--	--	--	MIDDLE ATLANTIC PRODUCTS
DRAWING	ROOF MAST - ANTENNA	--	--	X	X	--	--	--	X	--	--	--	ALDI TO PROVIDE ANTENNA REFER TO G-005 'DIVISION 27 - COMMUNICATIONS_ROOF MAST' FOR ROOF MAST ASSEMBLY, BALLAST, AND CONDUIT SCOPE.
DRAWING	SECURITY MONITOR - ECOMMMERCE	--	--	X	X	--	--	--	X	--	--	--	
DRAWING	SECURITY / CCTV / FIRE ALARM SYSTEMS	--	--	X	X	--	--	X	X	--	--	--	EVERON (FORMERLY PROTECTION 1)
DRAWING	TIME CLOCK	--	--	X	X	--	--	--	X	--	--	--	--

NOTE:
THE RESPONSIBILITY SCHEDULE IS MEANT TO PROVIDE AN OVERVIEW OF OWNER FURNISHED AND OWNER PROVIDED ITEMS. THIS IS NOT MEANT TO REPLACE THE GC OBLIGATIONS WITHIN THE DRAWINGS AND SPECIFICATIONS.

PLOTTED: 7/29/2025 9:49 AM

APD ENGINEERING ARCHITECTURE
615 Fishers Run Victor, NY 14564
585.742.2222 - www.apd.com

Copyright © 2024
APD Engineering & Architecture
615 Fishers Run
Victor, NY 14564

Drawing Alteration

It is a violation of law for any person, unless acting under the direction of licensed Architect, Professional Engineer, Landscape Architect, or Land Surveyor to alter any item on this document in any way. Any licensee who alters this document is required by law to affix his or her seal and to add the notation "Altered By" followed by his or her signature and the specific description of the alteration or revision.

DO NOT SCALE PLANS

Copying, Printing, Software and other processes required to produce these prints can stretch or shrink the actual paper or layout. Therefore, scaling of this drawing may be inaccurate. Contact APD E&A with any need for additional dimensions or clarifications.

Issued:		Date:
A	Issued for Permit	07/08/24
B	Issued for Bid	07/29/25
C		
D		
E		

Revisions:		Date:
1	Owner Changes	11/18/24
2	Owner Changes	07/29/25
3		
4		
5		
6		
7		
8		
9		
10		
11		
12		

PROJECT ARCHITECT/ENGINEER
Daniel Sargent

PROJECT LEAD
John Lynch

NOT FOR CONSTRUCTION

Seal Seal

ALDI Inc.
1171 North State Road 7
Royal Palm Beach, FL 33411
(561) 640-8000

ALDI Inc. Store #: 50
Coconut Crossing, FL
12850 Northlake Boulevard
Palm Beach Gardens, FL 33412
Palm Beach County

Project Name & Location:

Drawing Name:
Responsibility Schedule - Appendix B

Prototype: V7.08 LHRD
Type: GROUND UP
Drawn By: JWL
Scale: As Noted

Project No. 22-0267A

Drawing No. G-007

ABBREVIATIONS

AB	ANCHOR BOLT
ACOUST	ACOUSTICAL
AFF	ABOVE FINISHED FLOOR
AFS	ABOVE FLOOR SLAB
A/C	AIR CONDITIONING
ACP	ALUMINUM COMPOSITE PANEL
ACT	ACOUSTICAL CEILING TILE
ADD	ADDITION
ADJ	ADJACENT, ADJUSTABLE
AHU	AIR HANDLING UNIT
ALUM (N)	ALUMINUM
ANOD	ANODIZED
APPROX	APPROXIMATE(LY)
ARCH	ARCHITECT(URAL)
BRG	BEARING
BD	BOARD
BLDG	BUILDING
BLK (G)	BLOCK (ING)
BOT/BTM	BOTTOM
CAB	CABINET
CAP	CAPACITY
CAT	CATALOG
CD	CEILING DIFFUSER
CEM	CEMENT
CER	CERAMIC
CFM	CUBIC FEET PER MINUTE
CG	CORNER GUARD
CJ	CONTROL JOINT
CKT	CIRCUIT
℄	CENTER LINE
CLG	CEILING
CLR	CLEAR
CMU	CONCRETE MASONRY UNIT
CO	CLEANOUT
COL	COLUMN
CONC	CONCRETE
CONN	CONNECTION
CONT	CONTINUOUS
COORD	COORDINATE, COORDINATED
CORR	CORRIDOR
CPT	CARPET
CRS	COURSES
CT	CERAMIC TILE
DBL	DOUBLE
DEMO	DEMOLITION
DES	DESIGNATION
DET	DETAIL
DF	DRINKING FOUNTAIN
DIA OR Ø	DIAMETER
DIM	DIMENSION
DISP	DISPENSER
DN	DOWN
DO	DITTO (DO OVER)
DR	DOOR
DS	DOWNSPOUT
DWG	DRAWING
E	EAST
EA	EACH
EC	ELECTRICAL CONTRACTOR
EF	EACH FACE/ EPOXY FLOOR
EJ	EXPANSION JOINT
EL	REFERENCE ELEVATION
ELEC (T)	ELECTRIC(AL)
ELEV	ELEVATION, ELEVATOR
ENG	ENGINEER(ING)
ENLG	ENLARGED
EPS	EXTRUDED POLYSTYRENE
EQ	EQUAL
EQUIP	EQUIPMENT
EWC	ELECTRIC WATER COOLER
EXIST	EXISTING
EXP	EXPOSED, EXPANSION
EXT	EXTERIOR, EXTERNAL
ETR	EXISTING TO REMAIN
EW	EACH WAY
F	DEGREE FAHRENHEIT
FD	FLOOR DRAIN
FE	FIRE EXTINGUISHER
FEC	FIRE EXTINGUISHER CABINET
FCP	FIBER CEMENT PANEL
FF	FINISH FLOOR
FFE	FINISHED FLOOR ELEVATION
FIN	FINISH
FIX	FIXTURE
FL (R)	FLOOR (ING)
FLASH	FLASHING
FLUOR	FLUORESCENT
FOUND, FNDN	FOUNDATION
F.R.T.	FIRE RETARDANT TREATED
FTG	FOOTING
FT	FOOT, FEET
FUR	FURRING
GA	GAUGE
GALV	GALVANIZED
GB	GRAB BAR
GC	GENERAL CONTRACTOR
GD	GRADE, GRADING
GL	GLASS, GLAZING
GND	GROUND
GPM	GALLONS PER MINUTE
GWB, GYP BD	GYPSUM WALL BOARD
HD	HUB DRAIN
HDWR	HARDWARE
HDWD	HARDWOOD
HGT	HEIGHT
HM	HOLLOW METAL
HORIZ	HORIZONTAL (LY)
HP	HORSEPOWER
HR	HOUR
HV(AC)	HEATING/VENTILATING/ (AIR CONDITIONING)
HW	HOT WATER
ID	INSIDE DIAMETER
IN	INCHES
INCAN	INCANDESCENT
INSUL	INSULATED, INSULATION
INT	INTERIOR
INV	INVERT
JAN	JANITOR
J-BOX	JUNCTION BOX
JST	JOIST
JT	JOINT
K.D.	KNOCK DOWN
KIT	KITCHEN
K.P.	KICK PLATE
KWH	KILOWATT HOUR
LAM	LAMINATE
LAV	LAVATORY
LB (S)	POUND (S)
LG	LONG
MAS	MASONRY
MATL.	MATERIAL
MAX	MAXIMUM
MDF	MODIFIED DENSITY FIBERBOARD
MEZZ	MEZZANINE
MECH	MECHANICAL
MTL.	METAL
MFR	MANUFACTURER
MLD	MILDEW
MIN	MINIMUM
MISC	MISCELLANEOUS
MLDG	MOLDING
MO	MASONRY OPENING
MR	MOISTURE RESISTANT
MTD	MOUNTED
N	NORTH
N/A	NOT APPLICABLE
NIC	NOT IN CONTRACT
NO	NUMBER
NOM	NOMINAL
NTS	NOT TO SCALE
OC	ON CENTER
OD	OUTSIDE DIAMETER
OH	OVERHEAD
OPG	OPENING
OPP	OPPOSITE
ORIG	ORIGINAL
OZ	OUNCE
PART	PARTITION
PBD	PARTICLE BOARD
PCT	PORCELAIN CERAMIC TILE
PERF	PERFORATED
PF	PREFINISHED
PLAM	PLASTIC LAMINATE
PLUMB	PLUMBING
PLYWD	PLYWOOD
PR	PAIR
PREFAB	PREFABRICATED
PREP	PREPARE
PSF	POUNDS PER SQUARE FOOT
PSI	POUNDS PER SQUARE INCH
PT	PAINT(ED), PRESSURE TREATED
PTD	PAINTED
PL	PLATE / PROPERTY LINE
PLAS	PLASTER
PVC	POLY VINYL CHLORIDE
QTY	QUANTITY
R	RADIUS, RISER, R-VALUE
RA	RETURN AIR
RBR	RUBBER
RC	REFRIGERATION CONTRACTOR
RCP	REFLECTED CEILING PLAN
RD	ROOF DRAIN
RE	REFERENCE, REFER TO
REC	RECESSED
REFL	REFLECTED (IVE)
REINF	REINFORCE (ED) (ING)
REQ'D	REQUIRED
REQMT	REQUIREMENT
RES	RESILIENT
RET	RETURN
REV	REVISION, REVISED
RF	RADIO FREQUENCY
RM	ROOM
R.O.	ROUGH OPENING
S	SOUTH
SAPC	SUSPENDED-ACOUSTICAL-PANEL-CEILING
SCHED	SCHEDULE (D)
SCWD	SOLID CORE WOOD
SECT	SECTION
SGFT	STRUCTURAL GLAZED FACING TILE
SHT	SHEET
SIM	SIMILAR
SPEC	SPECIFICATION(S)
SQ	SQUARE
SS	STAINLESS STEEL
ST	STAIN(ED)
STD	STANDARD
STL	STEEL
STOR	STORAGE
SUSP	SUSPENDED
SV	SHEET VINYL
STRUCT	STRUCTURE, STRUCTURAL
T	TREAD
T & G	TONGUE & GROOVE
TBD	TO BE DETERMINED
TBR	TO BE REMOVED
TEL	TELEPHONE
TEMP	TEMPERED, TEMPORARY, TEMPERATURE
TERR	TERRAZZO
THK	THICK(NESS)
THR (ESH)	THRESHOLD
TOS	TOP OF STEEL
TOW	TOP OF WALL
TS	TRANSITION STRIP
TYP	TYPICAL
UC	UNDER CUT
UH	UNIT HEATER
UL	UNDERWRITER'S LABORATORY
UNF	UNFINISHED
UNO	UNLESS NOTED OTHERWISE
VAR	VARNISH
VB	VINYL BASE
VCT	VINYL COMPOSITION TILE
VENT	VENTILATION / VENTILATOR
VERT	VERTICAL(LY)
VEST	VESTIBULE
VIF	VERIFY IN FIELD
VIN	VINYL
VWC	VINYL WALL COVERING
W	WEST
W/	WITH
W/O	WITHOUT
WC	WATER CLOSET, WATER COOLER
WD	WOOD
WG	WALL GUARD
WT	WEIGHT
WWF	WELDED WIRE FABRIC

GENERAL SYMBOLS

SECTION NO., (TYP.) / SHT. WHERE SECTION IS DRAWN, (TYP.)	SECTION CUT
DETAIL NO., (TYP.) / SHT. WHERE DETAIL IS DRAWN, (TYP.)	DETAIL CUT
DETAIL NO., (TYP.) / SHT. WHERE DETAIL IS DRAWN, (TYP.)	DETAIL
ELEVATION NO., (TYP.) / SHT. WHERE ELEVATION IS DRAWN, (TYP.)	INTERIOR ELEV.
ELEVATION NO., (TYP.) / SHT. WHERE ELEVATION IS DRAWN, (TYP.)	EXTERIOR ELEV.
SECTION NO., (TYP.) / SHT. WHERE SECTION IS DRAWN, (TYP.)	BUILDING SECTION
XXX	DOOR NUMBER
Room XXX	ROOM NUMBER
X	KEY NOTE
XX	WINDOW/GLAZING NUMBER
X'-X"	CEILING HEIGHT
XX	REVISION TAG
X	MISCELLANEOUS TAG
XXXX	FINISH TAG - SEE DRAWING A-603
X'-X"	ELEVATION CHANGE
XX XX	SPOT ELEVATION TAG
	CENTER LINE
	CONTROL JOINT LINE
MATERIAL COLOR FINISH SYSTEM	INTERIOR WALL FINISH TAG

MATERIAL INDICATION

WOOD BLOCKING (CONTINUOUS)	BRICK
WOOD BLOCKING (NON-CONTINUOUS)	CONCRETE MASONRY UNIT
PLYWOOD	CONCRETE
FINISH WOOD	GRADE/EARTH
PARTICLE BOARD	GRAVEL
RIGID INSULATION	STEEL
BATT INSULATION OR SOUND ATTENUATION BLANKETS	EXPANDING FOAM INSULATION
TILE	FIRE WALL 2
WALL GRAPHIC	WALKOFF MAT

GENERAL CONSTRUCTION NOTES

1. ALL CONSTRUCTION SHALL CONFORM TO THE CODES LISTED ON G-002:

   A. THE CODES, RULES, AND REGULATIONS OF THE STATE IN WHICH THE WORK IS BEING PERFORMED.
   B. NFPA REQUIREMENTS AS WELL AS TO STANDARDS OF UNDERWRITERS LABORATORIES INC., AND LOCAL UTILITY CO.
   C. CONTRACTOR SHALL BE RESPONSIBLE FOR SECURING ALL PERMITS AS REQUIRED TO PROVIDE THE NEW CONSTRUCTION.

2. CONTRACTOR SHALL VISIT THE SITE AND EXAMINE EXISTING CONDITIONS PRIOR TO SUBMITTING BIDS. BIDS SHALL INCLUDE PROVISIONS FOR A COMPLETE JOB BASED ON THE DESIGN INTENT SHOWN ON THE DRAWINGS. FIELD VERIFY ALL DIMENSIONS & CONDITIONS PRIOR TO START OF WORK AND REPORT ALL DISCREPANCIES TO THE ARCHITECT / ENGINEER.

3. WHEN COMPARING THE DRAWINGS AND SPECIFICATIONS; THE DRAWINGS GOVERN SPECIFICATIONS FOR QUANTITY AND LOCATION, AND SPECIFICATIONS GOVERN DRAWINGS FOR QUALITY AND PERFORMANCE. IN THE EVENT OF AMBIGUITY IN QUANTITY OR QUALITY, THE GREATER QUANTITY AND SUPERIOR QUALITY SHALL GOVERN.

4. CONTRACTOR SHALL BE FULLY RESPONSIBLE FOR ALL COORDINATION AS REQUIRED INCLUDING COORDINATION WITH ANY WORK PROVIDED BY OWNER AND BY OTHERS.

   A. REFER TO HVAC, PLUMBING, & ELECTRICAL DRAWINGS FOR WORK PERFORMED BY THOSE TRADES.

5. THE OWNER SHALL DESIGNATE STAGING AND STORAGE AREAS OF THE SITE FOR USE BY CONTRACTOR DURING CONSTRUCTION. CONTRACTOR SHALL KEEP THE PREMISES AND SURROUNDING AREA FREE FROM ACCUMULATION OF WASTE OF RUBBISH MATERIALS, CONTRACTOR'S TOOLS, CONSTRUCTION EQUIPMENT, MACHINERY, AND SURPLUS MATERIALS.

6. AREAS OF THE SITE AND ANY EXISTING CONSTRUCTION TO REMAIN, AND IF DAMAGED DURING CONSTRUCTION SHALL BE RESTORED TO THE ORIGINAL CONDITION (AT NO ADDITIONAL COST TO THE OWNER.)

7. CONTRACTOR SHALL PROVIDE ALL PROTECTION OF THE WORK THROUGHOUT CONSTRUCTION AS REQUIRED AND PER CODE.

8. PROVIDE A SELF-LEVELING CEMENTITIOUS UNDERLAYMENT WHERE PATCHING COMPOUNDS DO NOT MEET MANUFACTURER REQUIREMENTS FOR SUBSTRATE PREPARATION.

9. PAINTING INCLUDES WALLS, SOFFITS, DOOR FRAMES, HOLLOW METAL DOORS, ALL EXPOSED SURFACES, AND ALL SURFACE MOUNTED ITEMS AS REQUIRED TO PROVIDE A FINISHED PRODUCT.

10. CONTRACTOR TO VERIFY LOCATIONS OF ALL WALL MOUNTED ITEMS AND PROVIDE SOLID BLOCKING FOR MOUNTING.

11. REFER TO FINISH PLANS & NOTES FOR TYPES AND EXTENT OF FINISHES.

12. REFER TO PROJECT MANUAL APPENDIX 'A' FOR ALL ITEMS FURNISHED BY OWNER AND INSTALLED BY CONTRACTOR.

13. REFER TO PROJECT MANUAL APPENDIX 'B' FOR ALL ITEMS PROVIDED BY OWNER.

APD ENGINEERING ARCHITECTURE
615 Fishers Run Victor, NY 14564
585.742.2222 - www.apd.com

Copyright © 2024
APD Engineering & Architecture
615 Fishers Run
Victor, NY 14564

Drawing Alteration

It is a violation of law for any person, unless acting under the direction of licensed Architect, Professional Engineer, Landscape Architect, or Land Surveyor to alter any item on this document in any way. Any licensee who alters this document is required by law to affix his or her seal and to add the notation "Altered By" followed by his or her signature and the specific description of the alteration or revision.

DO NOT SCALE PLANS

Copying, Printing, Software and other processes required to produce these prints can stretch or shrink the actual paper or layout. Therefore, scaling of this drawing may be inaccurate. Contact APD E&A with any need for additional dimensions or clarifications.

Issued:		Date:
A	Issued for Permit	07/08/24
B	Issued for Bid	07/29/25
C		
D		
E		

Revisions:		Date:
1	Owner Changes	11/18/24
2	Owner Changes	07/29/25
3		
4		
5		
6		
7		
8		
9		
10		
11		
12		

PROJECT ARCHITECT/ENGINEER
Daniel Sargent

PROJECT LEAD
John Lynch

NOT FOR CONSTRUCTION

Seal | Seal

ALDI Inc.
1171 North State Road 7
Royal Palm Beach, FL 33411
(561) 640-8000

ALDI Inc. Store #: 50
Coconut Crossing, FL 1
12850 Northlake Boulevard
Palm Beach Gardens, FL 33412
Palm Beach County

Project Name & Location:

General Notes, Symbols, & Abbrev.
Drawing Name:

Prototype: V7.08 LHRD	Project No. 22-0267A
Type: GROUND UP	
Drawn By: JWL	A-001
Scale: As Noted	Drawing No.

PLOTTED: 7/29/2025 9:43 AM

FLOOR FINISH SCHEDULE

01	CONCRETE SLAB - SMOOTH FINISH
02	CONCRETE SLAB (FREEZER)- HEAVY BROOM FINISH
03	CONCRETE SLAB (COOLER) - SMOOTH FINISH
04	CONCRETE SLAB - SHADED AREA INDICATES EXTENTS OF GROUND AND POLISHED CONCRETE SLAB - SEE SPECS - CONFIRM DESIRED FINISH WITH ALDI CONSTRUCTION REPRESENTATIVE
05	CONCRETE SLAB (VESTIBULE) - SMOOTH FINISH

NOTES:
1. REFER TO DRAWING A-603 FOR COLOR/ FINISH/ MATERIAL SCHEDULES.
2. ALL PARTITION DIMENSIONS ARE TO FACE OF STUD UNLESS NOTED OTHERWISE (IE. CLEAR)
3. PROVIDE BLOCKING AS NEEDED FOR ALL WALL MOUNTED ITEMS
4. REFER TO DRAWING A-102 FOR FLOOR MOUNTED EQUIPMENT
5. REFER TO DRAWING A-603 FOR INTERIOR METAL STUD INFORMATION

(X) INDICATES COLUMN DESIGNATION

SLAB NOTES:
1. FINISHED FLOOR = 0'-0" (22.50) UNLESS NOTED OTHERWISE. REFER TO SHEET S-102 FOR TOP OF FINISH FLOOR ELEVATIONS.
2. SOIL POISONING FOR TERMITE CONTROL: REFER TO SPECIFICATION SECTION 313116 - TERMITE CONTROL. TERMITE PROTECTION STATEMENT.
3. A SIGNED CONTRACT ASSURING THE INSTALLATION, MAINTENANCE, AND MONITORING OF THE BAITING SYSTEM FOR A MINIMUM OF 5 YEARS FROM THE ISSUE OF CERTIFICATE OF OCCUPANCY SHALL BE PROVIDED TO THE BUILDING OFFICIAL PRIOR TO THE POURING OF THE SLAB AND THE SYSTEM MUST BE INSTALLED PRIOR TO THE FINAL BUILDING APPROVAL. IF THE BAITING SYSTEM DIRECTIONS FOR USE REQUIRE A MONITORING PHASE COMPONENT SHALL BE DEEMED TO CONSTITUTE INSTALLATION OF THE SYSTEM.
4. TROWEL AND FINE-BROOM FINISH: APPLY A FIRST TROWEL FINISH TO SURFACES WHERE CERAMIC OR PORCELAIN TILE IS TO BE INSTALLED BY EITHER THICKSET OR THIN-SET METHOD. WHILE CONCRETE IS STILL PLASTIC, SLIGHTLY SCARIFY SURFACE WITH A FINE BROOM. REFER TO SPEC SECTION 033000 FOR ADDITIONAL CONCRETE FINISHING INFORMATION.

FIRE DEPARTMENT NOTES:
1. PROVIDE FIRE KEY (KNOX) BOX COORD. EXACT LOCATION w/ LOCAL FIRE MARSHALL.
2. PROVIDE BUILDING ADDRESS NUMBERS THAT SHALL BE BETWEEN 8"-12" HIGH AND CONTRASTING WITH THEIR BACKGROUND.

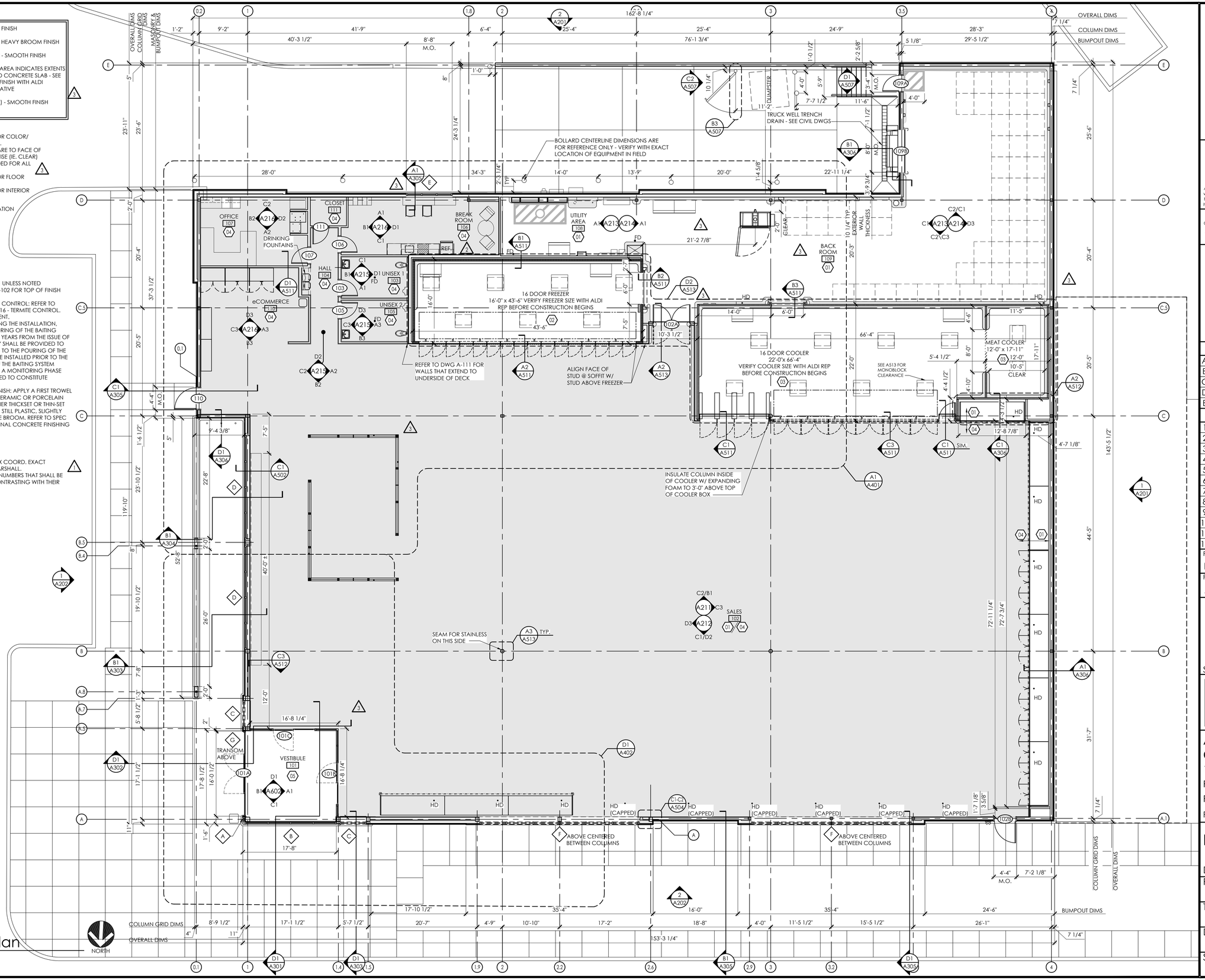

1 Floor Plan
SCALE: 1/8" = 1'-0"

PLOTTED: 7/29/2025 9:43 AM

APD ENGINEERING ARCHITECTURE
615 Fishers Run Victor, NY 14564
585.742.2222 - www.apd.com

Copyright © 2024
APD Engineering & Architecture
615 Fishers Run
Victor, NY 14564

Drawing Alteration

It is a violation of law for any person, unless acting under the direction of licensed Architect, Professional Engineer, Landscape Architect, or Land Surveyor to alter any item on this document in any way. Any licensee who alters this document is required by law to affix his or her seal and to add the notation "Altered By" followed by his or her signature and the specific description of the alteration or revision.

DO NOT SCALE PLANS

Copying, Printing, Software and other processes required to produce these prints can stretch or shrink the actual paper or layout. Therefore, scaling of this drawing may be inaccurate. Contact APD E&A with any need for additional dimensions or clarifications.

Issued:		Date:
A	Issued for Permit	07/08/24
B	Issued for Bid	07/29/25
C		
D		
E		

Revisions:		Date:
1	AHJ Responses	10/02/24
2	Owner Changes	11/18/24
3	Owner Changes	07/29/25
4		
5		
6		
7		
8		
9		
10		
11		
12		

PROJECT ARCHITECT/ENGINEER
Daniel Sargent

PROJECT LEAD
John Lynch

NOT FOR CONSTRUCTION

Seal | Seal

ALDI Inc.
1171 North State Road 7
Royal Palm Beach, FL 33411
(561) 640-8000

ALDI Inc. Store #: 50
Coconut Crossing, FL
12850 Northlake Boulevard
Palm Beach Gardens, FL 33412
Palm Beach County

Project Name & Location:

Floor Plan

Drawing Name:

Prototype: V7.08 LHRD	Project No. 22-0267A
Type: GROUND UP	
Drawn By: JWL	A-101
Scale: As Noted	Drawing No.

KEYED NOTES:

100 SERIES
CONTRACTOR PROVIDED (FURNISHED & INSTALLED)

101	CPB	6" PALLET BUMPER REFER TO DWG. A1/A504 - CONTRACTOR SHALL FULLY WELD ALL SEAMS AND GRIND SMOOTH PRIOR TO PAINT
102	CRTB	4'ct x 6'h CONC. CART BUMPER - PROVIDE SAWN OR TOOLED JOINTS AT ALL CORNERS
103		ROOF ACCESS LADDER
104	CG-ST	PROVIDE AT ALL INSIDE AND OUTSIDE CORNERS OF UTILITY ROOM AND BACK ROOM
105	BLRD-2	10" Ø PIPE BOLLARD - SEE STRUCT DWGS
106		NOT USED
107		5/16" x 3 1/2" x 6" REVERSE ANGLE PALLET BUMPER - HOLD TIGHT TO WALL
108		STAINLESS STEEL BUMPER GUARD - REFER TO INTERIOR ELEVATIONS FOR LOCATIONS. INSTALL PER MFR RECOMMENDATIONS; SEE SPEC
109		HOT WATER HEATER - SEE INT ELEV C3/A213
110		WALK OFF MAT - LAYOUT BY NATIONAL VENDOR; SEE SPEC
111		6" THICK EQUIPMENT PAD - VERIFY SIZE W/ ELECT AND PLUMB CONTRACTORS PRIOR TO INSTALLATION
112	BLRD-3	3" GALVANIZED STEEL POSTS - SEE A603
113		MOP BASIN - INSTALL BOTTOM OF BASIN @ FINISHED FLOOR ELEVATION
114	SSBR	SEE DETAILS A2,C3/A511
115		ANODIZED ALUMINUM DOOR PROTECTORS (QUANTITY OF 4) COORD LOCATIONS WITH ALDI CONSTRUCTION REPRESENTATIVE. SEE SPECIFICATION SECTION 055000
116		PIPE GUARDRAIL & HANDRAIL
117		STAINLESS STEEL COLUMN COVERS - SEE DETAIL A3/A513
118	BLRD-4	SEE SECTION B1/A304
119	TR-1	TRASH RECEPTACLE - VERIFY LOCATION W/ OWNER'S REPRESENTATIVE
120		FIRE EXTINGUISHER - SEE SPEC. MOUNT IN COMPLIANCE WITH REQUIREMENTS OF AUTHORITIES HAVING JURISDICTION
121		FIRE & WATER SERVICE - SEE PLUMB DWGS
122		SALES FLOOR STL ANGLE (3x4x1/4 w/PUNCHED ¼" DIAM HOLES @ 24" O.C. MAX & DRILL 6" FROM ENDS AS REQUIRED FOR MERCHANDISE GONDOLAS. COORD LOCATIONS w/ ALDI CONSTRUCTION REP. PT-3 / CL-5
123		(4) HEAVY DUTY COAT HOOKS - SEE INT ELEV C3/A213
124		ROOF LEADER CLEAN-OUT ON EXTERIOR - SEE PLUMB
125		HOSE BIB - SEE PLUMB DWGS
126		STRIPE PAINT AREA IN FRONT OF EGRESS DOOR PT-10/CL-4
127		STRIPE PAINT AREA IN FRONT ELECTRICAL PANELS PT-10/CL-4 - PROVIDE AN ELECTRICAL CLEARANCE WARNING LABEL - SEE ELEC. DWGS
128		TRACK GUARDS - SEE SPEC; INSTALL PER MFR'S WRITTEN INSTRUCTIONS
129		IMPACT DOORS & HARDWARE - SEE SPEC; INSTALL PER MFR'S WRITTEN INSTRUCTIONS
130	BR	FLOOR MOUNTED STAINLESS STEEL RAIL - PRE-DRILL MOUNTING HOLES PRIOR TO INSTALLATION OF MULTIDECK UNITS. HOLD AS CLOSE AS POSSIBLE TO MULTIDECK UNITS - SEE SPEC; INSTALL PER MFR'S WRITTEN INSTRUCTIONS
131		DOCK LEVELER AND SEAL - SEE SPEC; INSTALL PER MFR'S WRITTEN INSTRUCTIONS
132		GUIDANCE RAILING - SEE SPEC; INSTALL PER MFR'S WRITTEN INSTRUCTIONS
133		16'-0" X 6" GRAY PVC TO HOLD BALER WIRE SEE INT ELEV C1/A214
134	BR-C	FLOOR MOUNTED CORNER GUARD - SEE SPEC; INSTALL PER MFR'S WRITTEN INSTRUCTIONS
135	WP-1	WOOD PANELS; INSTALL PER MFR'S WRITTEN INSTRUCTIONS (ABOVE MDU'S)
136		MULTI-DECK UNIT CLOSURE PANEL - INSTALL 22 GAUGE STAINLESS STEEL OR ALUMINUM (BRUSHED FINISH) AT END OF UNIT FROM FINISHED FLOOR TO TOP OF CASE. WIDTH TO ALLOW FOR SHORT ZIP SCREW (SILVER) ATTACHMENT TO END PANEL AND 1/2" BEND AT WALL INTERSECTION. USE CLEAR SILICONE AT WALL TO ALLOW FOR MOVEMENT.
137		4'-0" X 8" GRAY PVC TO HOLD AS-BUILT DWGS - SEE INT ELEV C1/A214
138		(20 GA) GALVANIZED METAL CLOSURE W/ 1/2" RETURN - PROVIDE SEALANT @ EDGES OF CLOSURE
139	AC-1	BABY CHANGING STATION
140	AC-3	GRAB BAR
141	AC-4	MIRROR UNIT
142	AC-5	HAND DRYER AND WALL GUARD

200 SERIES
OWNER FURNISHED & CONTRACTOR INSTALLED - REFER TO APPENDIX 'A' OF THE PROJECT CONTRACT MANUAL

201		HANGING "NO PARKING" SIGN
202		CHECKOUT COUNTER
203	R-1	REFRIGERATOR
204	MW-1	MICROWAVE OVEN
205		eCOMMERCE SHELVING - SEE A131 FOR SIZE
206		SHELVING AND HOLD AREAS - INSTALL REVERSE ANGLE PALLET BUMPER AT BASE OF SHELVING TO FLOOR WITH (4) ANCHORS
207		INTERIOR GRAPHICS & MILLWORK - TO BE INSTALLED PRIOR TO STORE TURNOVER TO OPERATIONS
208		COOLER/FREEZER RACKING SYSTEM
209		SAFE & SAFE CABINET, SEE DETAILS B1,B2/A513
210		LOCKERS - PROVIDE MINIMUM 5% ACCESSIBLE LOCKERS
211		MANAGER ORGANIZATION DESK
212		BREAKROOM CASEWORK
213		OFFICE DESK - PROVIDE 2" GROMMETS IN COUNTERTOP - CONFIRM LOCATIONS WITH ALDI REP PRIOR TO DRILLING
214		OFFICE CASEWORK
215		NOT USED
216		TABLE & CHAIRS
217		WALL MOUNTED SACKING COUNTER
218	CG-A	INSTALL AT ALL INSIDE & OUTSIDE CORNERS AT SALES, HALL, &VESTIBULE
219		POWER WALL - REFER TO ELECT DWGS
220		SPOT MERCHANDISER
221		SS BASE PROTECTION ATTACHED TO SPOT MERCHANDISER FRAME
222		MERCHANDISING FIXTURES
223		BATTERY CHARGERS
224		ALDI MIRROR
225		PROJECTED IMAGE FROM PROJECTOR ABOVE - SEE A111 FOR PROJECTOR LOCATION
226		QUARTER CART SIGN 4'-6" AFF TO BOTTOM OF SIGN
227		QUARTER CART SIGN CENTERED AT 7'-6" AFF TO CENTER OF SIGN
228		GRAPHIC SCREEN WALL; INSTALL PER MFR'S INSTRUCTIONS, CORE DRILL FLOOR FOR POSTS
229		SCO SCREEN WALL; INSTALL PER MFR'S INSTRUCTIONS, CORE DRILL FLOOR FOR POSTS
230	R-2	REFRIGERATOR (eCOMMERCE)
231	F-1	FREEZER (eCOMMERCE)
232		FILING CABINET
233		BREAK ROOM HIGH TOP COUNTER AND CHAIRS - SEE D2/A512
234	DW-1	DISHWASHER

300 SERIES
OWNER PROVIDED (FURNISHED & INSTALLED) - REFER TO APPENDIX 'B' OF THE PROJECT CONTRACT MANUAL

301	WALK-IN COOLER
302	WALK-IN FREEZER
303	PALLET JACKS/STACKERS
304	FUTURE CHECKOUT
305	MULTI-DECK UNIT
306	AUTOMATIC SLIDING DOORS W/ BREAKAWAY HINGED EMERGENCY EXIT
307	TIME CLOCK MOUNTING BRACKET
308	DUMPSTER
309	I.T. RACK - COORDINATE WITH ALDI CONSTRUCTION REPRESENTATIVE
310	WALK-IN MEAT COOLER
311	SHOPPING CARTS - VERIFY SIZE OF CARTS ORDERED WITH ALDI CONSTRUCTION REPRESENTATIVE PRIOR TO REPLACEMENT OF RAILS & STARTER POSTS
312	BALER
313	SMART SAFE
314	FLOOR SCRUBBER
315	SELF CHECKOUT (SCO) COUNTERS
316	FUTURE SELF CHECKOUT (SCO) COUNTERS
317	BEVERAGE COOLER
318	NOT USED
319	SOAP DISPENSER
320	TOILET PAPER DISPENSER
321	EVAPORATOR/MONOBLOCK - VERIFY LOCATION w/ REFRIGERATION PACKAGE
322	NOT USED
323	NOT USED

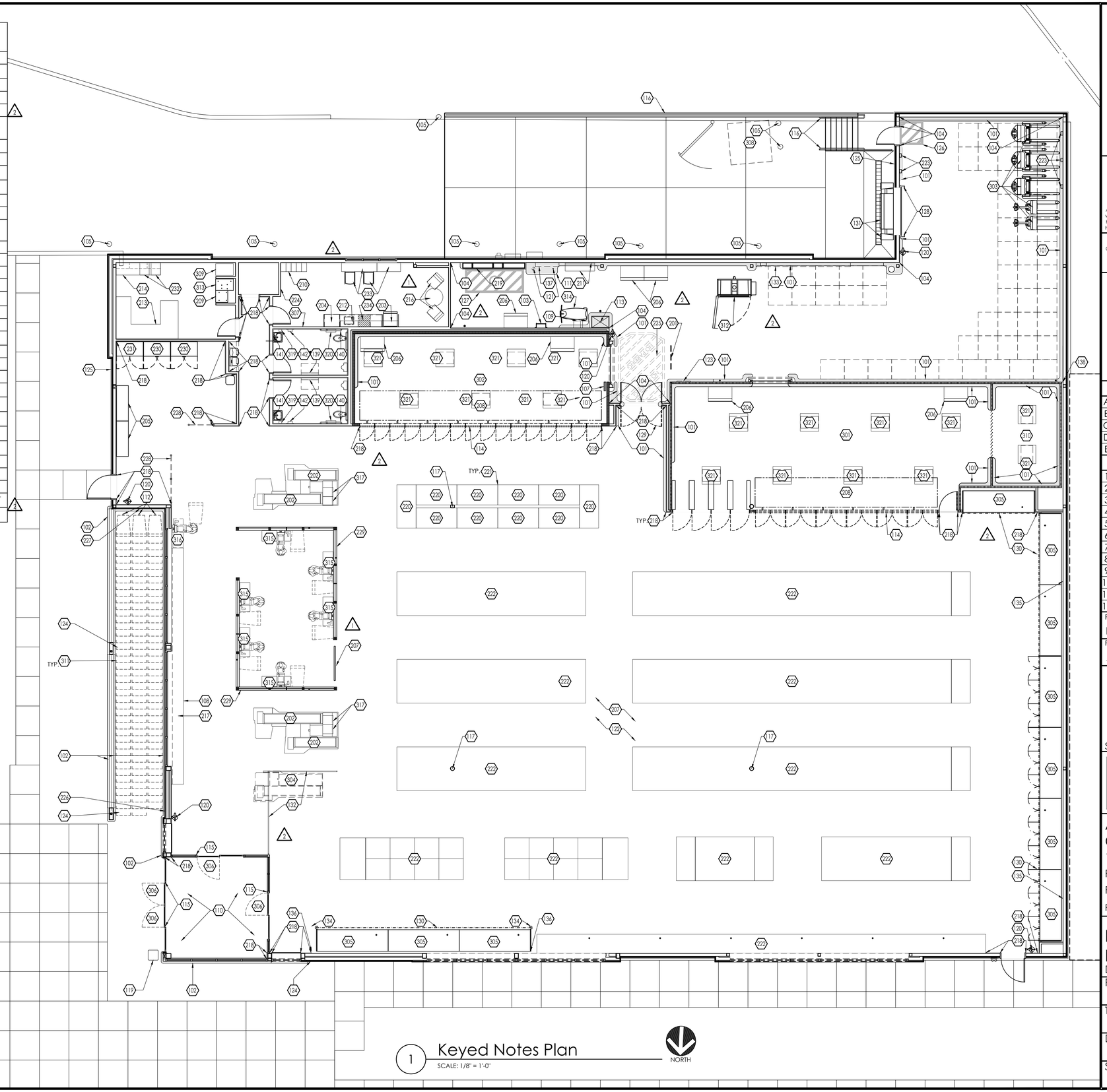

NOTES:

A. VERIFY INSTALLATION OF ALL OWNER FURNISHED ITEMS WITH OWNER'S REPRESENTATIVE.

B. REFER TO DRAWING A-603 FOR COLOR/ FINISH/ MATERIAL SCHEDULES.

1 Keyed Notes Plan
SCALE: 1/8" = 1'-0"

NORTH

PLOTTED: 7/29/2025 9:43 AM

APD ENGINEERING ARCHITECTURE
615 Fishers Run Victor, NY 14564
585.742.2222 - www.apd.com

Copyright © 2024
APD Engineering & Architecture
615 Fishers Run
Victor, NY 14564

Drawing Alteration

It is a violation of law for any person, unless acting under the direction of licensed Architect, Professional Engineer, Landscape Architect, or Land Surveyor to alter any item on this document in any way. Any licensee who alters this document is required by law to affix his or her seal and to add the notation "Altered By" followed by his or her signature and the specific description of the alteration or revision.

DO NOT SCALE PLANS

Copying, Printing, Software and other processes required to produce these prints can stretch or shrink the actual paper or layout. Therefore, scaling of this drawing may be inaccurate. Contact APD E&A with any need for additional dimensions or clarifications.

Issued:		Date:
A	Issued for Permit	07/08/24
B	Issued for Bid	07/29/25
C		
D		
E		

Revisions:		Date:
1	Owner Changes	11/18/24
2	Owner Changes	07/29/25
3		
4		
5		
6		
7		
8		
9		
10		
11		
12		

PROJECT ARCHITECT/ENGINEER
Daniel Sargent

PROJECT LEAD
John Lynch

NOT FOR CONSTRUCTION

Seal | Seal

ALDI Inc.
1171 North State Road 7
Royal Palm Beach, FL 33411
(561) 640-8000

ALDI Inc. Store #: 50
Coconut Crossing, FL
12850 Northlake Boulevard
Palm Beach Gardens, FL 33412
Palm Beach County

Project Name & Location:

Keyed Notes Plan
Drawing Name:

Prototype: V7.08 LHRD	Project No. 22-0267A
Type: GROUND UP	
Drawn By: JWL	A-102
Scale: As Noted	Drawing No.

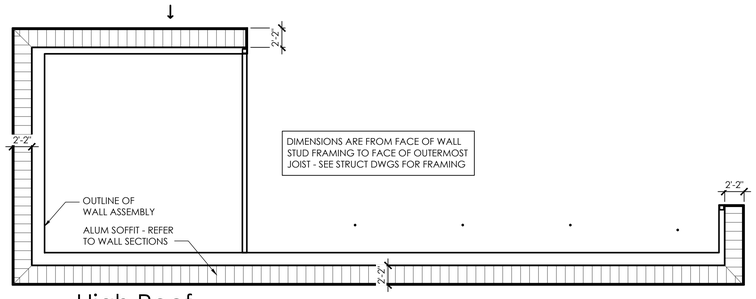

2 High Roof - Reflected Ceiling Plan

SCALE: 1/8" = 1'-0"

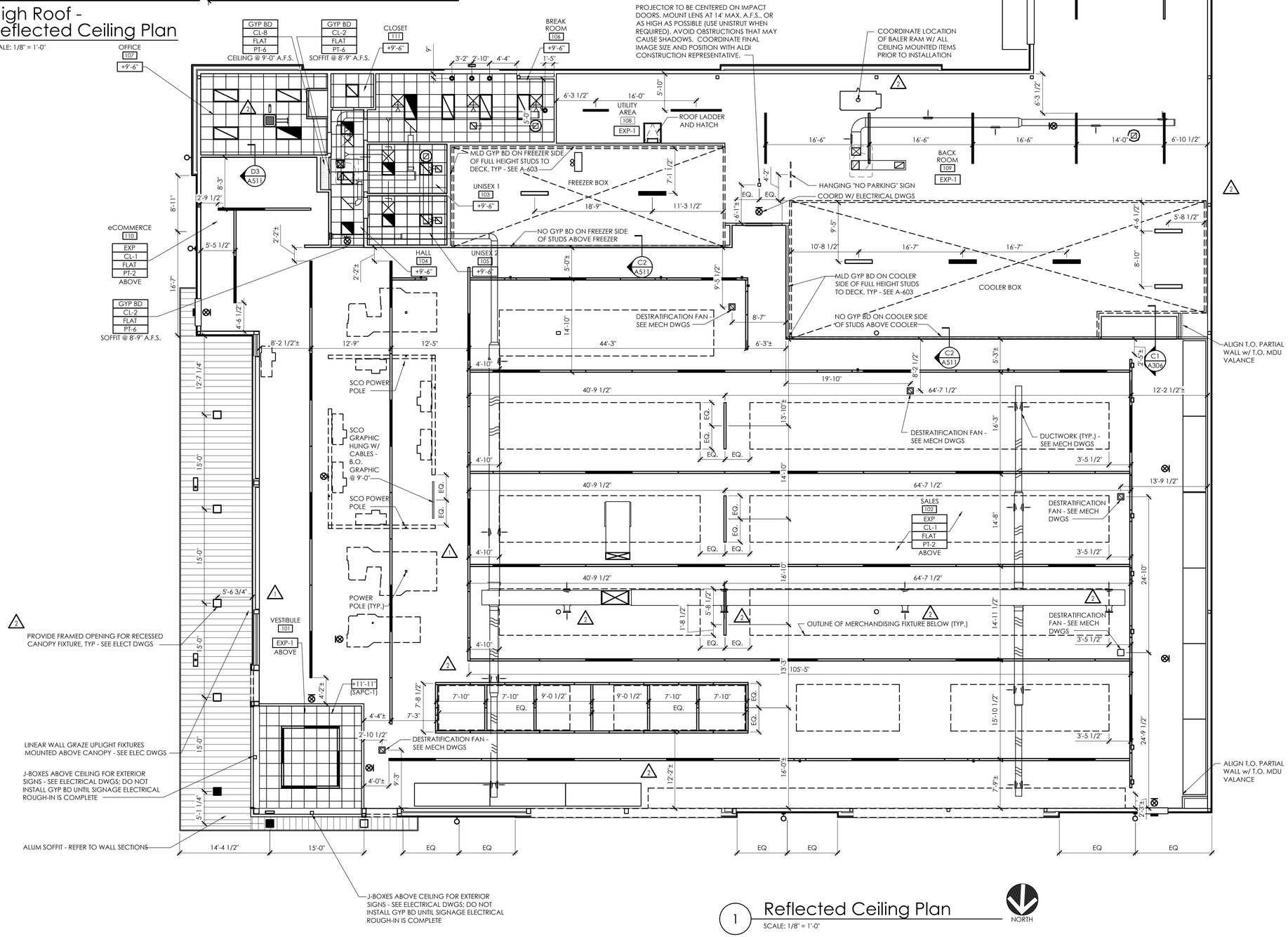

1 Reflected Ceiling Plan

SCALE: 1/8" = 1'-0"

NORTH

NOTE:

1. COORDINATE WITH STRUCTURAL, PLUMBING, MECHANICAL AND ELECTRICAL FOR ALL ITEMS PROVIDED BY THOSE DISCIPLINES. CONTRACTOR SHALL BE RESPONSIBLE FOR LAYING OUT ALL CEILING MOUNTED ELEMENTS WITH ALL OTHER CEILING MOUNTED EQUIPMENT AND STRUCTURE AND CORRECTING ANY INTERFERENCE PRIOR TO INSTALLATION.
2. PREPARE AND PAINT ALL CEILING MOUNTED ITEMS ON SALES FLOOR , INCLUDING BUT NOT LIMITED TO HVAC DIFFUSERS AND RETURNS, THREADED ROD, CONDUIT AND SPRINKLER PIPING. DO NOT PAINT EVAC CONDENSATE REMOVAL SYSTEM PINCH VALVES, OR ANY WIRELESS ACCESS POINT APPLIANCES PROVIDED BY ALDI.
3. ALL DIMENSIONS ARE TO FACE OF WALL FINISH UNLESS OTHERWISE NOTED.
4. ALL DIMENSIONS TO LIGHT LOCATIONS ARE TO CENTERLINE OF FIXTURE.
5. CAULK ALL SUSPENDED CEILING TO WALL INTERSECTIONS - SEE SPEC SECTION 079200.
6. ALL INTERIOR WALLS EXCEPT SHADED PORTIONS EXTEND TO UNDERSIDE OF DECK.
7. ATTACH POWERPOLE TO ROOF STRUCTURE WITH UNISTRUT (TYP. AT CHECKLANES AND SPOT MERCHANDISERS) - PAINT UNISTRUT TO MATCH CEILING.
8. GC TO ENSURE ALL JOIST AND JOIST GIRDER TAGS ARE PROPERLY SECURED TO JOIST WEBBING AND CONCEALED FROM VIEW PRIOR TO PAINTING.
9. NORDEON LIGHTING SYSTEM SHALL BE OWNER FURNISHED AND CONTRACTOR INSTALLED. CONTRACTOR SHALL HAVE FIVE (5) DAYS FROM DATE OF DELIVERY ACCEPTANCE TO VERIFY SHIPMENT FOR ANY DAMAGES. CORRECT QUANTITY OF FIXTURES AND PLACE A CLAIM. AFTER FIVE (5) DAYS THE CONTRACTOR SHALL BE RESPONSIBLE FOR ANY DAMAGES AND ADDITIONAL FIXTURES REQUIRED.
10. THE LIGHT FIXTURE LOCATION DIMENSIONS ARE BASED ON THE DESIGNED SALES FLOOR & GONDOLA LAYOUT. THE CONTRACTOR SHALL COORDINATE THE FINAL LIGHT FIXTURE MOUNTING LOCATIONS WITH THE ACTUAL AS BUILT CONDITIONS.

LEGEND:

- EXIT SIGN
- 2' X 2' RECESSED LIGHT FIXTURE
- 2' X 4' RECESSED LIGHT FIXTURE
- 4' STRIP LIGHT FIXTURE
- 6' STRIP LIGHT FIXTURE
- 8' STRIP LIGHT FIXTURE
- VAPORTITE LIGHT FIXTURE
- SINGLE LAMP PENDANT
- DOCK LIGHT
- CANOPY / SOFFIT SQUARE
- EXTERIOR ACCENT CYLINDER
- WALL PACK
- 48" LINEAR WALL GRAZE UPLIGHT LIGHT FIXTURE
- EMERGENCY EGRESS LIGHT FIXTURE
- RETURN AIR GRILLE
- SUPPLY DIFFUSER
- LINEAR DIFFUSER
- DESTRATIFICATION FAN
- DUCTLESS SPLIT FAN COIL UNIT
- SHADED FIXTURES ARE NIGHT LIGHTS - SEE LIGHTING PLAN

APD ENGINEERING ARCHITECTURE
615 Fishers Run Victor, NY 14564
585.742.2222 - www.apd.com

Copyright © 2024
APD Engineering & Architecture
615 Fishers Run
Victor, NY 14564

Drawing Alteration

It is a violation of law for any person, unless acting under the direction of licensed Architect, Professional Engineer, Landscape Architect, or Land Surveyor to alter any item on this document in any way. Any licensee who alters this document is required by law to affix his or her seal and to add the notation "Altered By" followed by his or her signature and the specific description of the alteration or revision.

DO NOT SCALE PLANS

Copying, Printing, Software and other processes required to produce these prints can stretch or shrink the actual paper or layout. Therefore, scaling of this drawing may be inaccurate. Contact APD E&A with any need for additional dimensions or clarifications.

Issued:		Date:
A	Issued for Permit	07/08/24
B	Issued for Bid	07/29/25
C		
D		
E		

Revisions:		Date:
1	Owner Changes	11/18/24
2	Owner Changes	07/29/25
3		
4		
5		
6		
7		
8		
9		
10		
11		
12		

PROJECT ARCHITECT/ENGINEER
Daniel Sargent

PROJECT LEAD
John Lynch

NOT FOR CONSTRUCTION

Seal | Seal

ALDI Inc.
1171 North State Road 7
Royal Palm Beach, FL 33411
(561) 640-8000

ALDI Inc. Store #: 50
Coconut Crossing, FL
12850 Northlake Boulevard
Palm Beach Gardens, FL 33412
Palm Beach County

Project Name & Location:

Reflected Ceiling Plan

Drawing Name:

Prototype: V7.08 LHRD	Project No. 22-0267A
Type: GROUND UP	
Drawn By: JWL	A-111
Scale: As Noted	Drawing No.

PLOTTED: 7/29/2025 9:43 AM

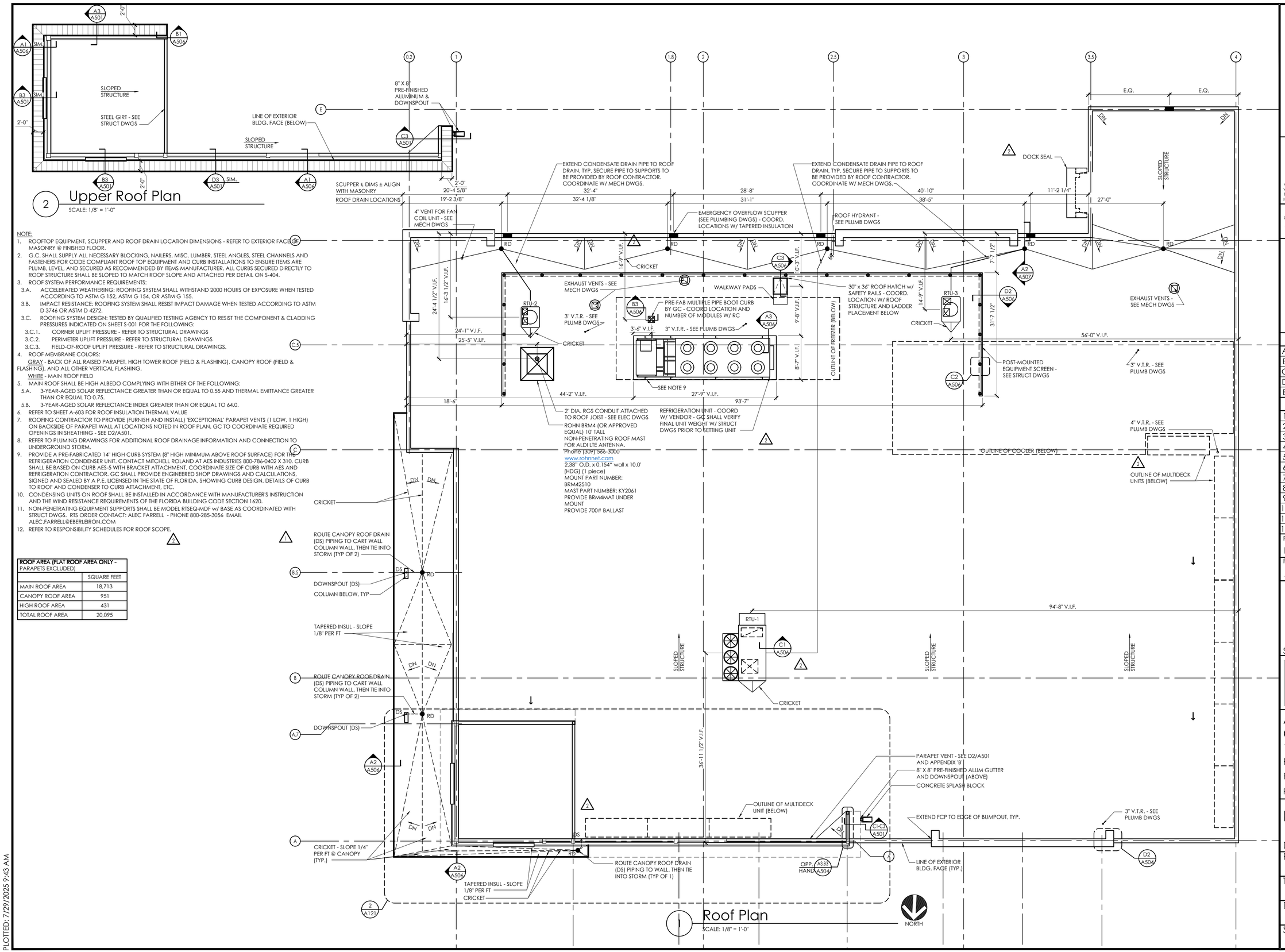

NOTE:

1. ROOFTOP EQUIPMENT, SCUPPER AND ROOF DRAIN LOCATION DIMENSIONS - REFER TO EXTERIOR FACE OF MASONRY @ FINISHED FLOOR.
2. G.C. SHALL SUPPLY ALL NECESSARY BLOCKING, NAILERS, MISC. LUMBER, STEEL ANGLES, STEEL CHANNELS AND FASTENERS FOR CODE COMPLIANT ROOF TOP EQUIPMENT AND CURB INSTALLATIONS TO ENSURE ITEMS ARE PLUMB, LEVEL, AND SECURED AS RECOMMENDED BY ITEMS MANUFACTURER. ALL CURBS SECURED DIRECTLY TO ROOF STRUCTURE SHALL BE SLOPED TO MATCH ROOF SLOPE AND ATTACHED PER DETAIL ON S-404.
3. ROOF SYSTEM PERFORMANCE REQUIREMENTS:
   - 3.A. ACCELERATED WEATHERING: ROOFING SYSTEM SHALL WITHSTAND 2000 HOURS OF EXPOSURE WHEN TESTED ACCORDING TO ASTM G 152, ASTM G 154, OR ASTM G 155.
   - 3.B. IMPACT RESISTANCE: ROOFING SYSTEM SHALL RESIST IMPACT DAMAGE WHEN TESTED ACCORDING TO ASTM D 3746 OR ASTM D 4272.
   - 3.C. ROOFING SYSTEM DESIGN: TESTED BY QUALIFIED TESTING AGENCY TO RESIST THE COMPONENT & CLADDING PRESSURES INDICATED ON SHEET S-001 FOR THE FOLLOWING:
     - 3.C.1. CORNER UPLIFT PRESSURE - REFER TO STRUCTURAL DRAWINGS
     - 3.C.2. PERIMETER UPLIFT PRESSURE - REFER TO STRUCTURAL DRAWINGS
     - 3.C.3. FIELD-OF-ROOF UPLIFT PRESSURE - REFER TO STRUCTURAL DRAWINGS.
4. ROOF MEMBRANE COLORS:
   GRAY - BACK OF ALL RAISED PARAPET, HIGH TOWER ROOF (FIELD & FLASHING), CANOPY ROOF (FIELD & FLASHING), AND ALL OTHER VERTICAL FLASHING.
   WHITE - MAIN ROOF FIELD
5. MAIN ROOF SHALL BE HIGH ALBEDO COMPLYING WITH EITHER OF THE FOLLOWING:
   - 5.A. 3-YEAR-AGED SOLAR REFLECTANCE GREATER THAN OR EQUAL TO 0.55 AND THERMAL EMITTANCE GREATER THAN OR EQUAL TO 0.75.
   - 5.B. 3-YEAR-AGED SOLAR REFLECTANCE INDEX GREATER THAN OR EQUAL TO 64.0.
6. REFER TO SHEET A-603 FOR ROOF INSULATION THERMAL VALUE
7. ROOFING CONTRACTOR TO PROVIDE (FURNISH AND INSTALL) 'EXCEPTIONAL' PARAPET VENTS (1 LOW, 1 HIGH) ON BACKSIDE OF PARAPET WALL AT LOCATIONS NOTED IN ROOF PLAN. GC TO COORDINATE REQUIRED OPENINGS IN SHEATHING - SEE D2/A501.
8. REFER TO PLUMBING DRAWINGS FOR ADDITIONAL ROOF DRAINAGE INFORMATION AND CONNECTION TO UNDERGROUND STORM.
9. PROVIDE A PRE-FABRICATED 14" HIGH CURB SYSTEM (8" HIGH MINIMUM ABOVE ROOF SURFACE) FOR THE REFRIGERATION CONDENSER UNIT. CONTACT MITCHELL ROLAND AT AES INDUSTRIES 800-786-0402 X 310. CURB SHALL BE BASED ON CURB AES-5 WITH BRACKET ATTACHMENT. COORDINATE SIZE OF CURB WITH AES AND REFRIGERATION CONTRACTOR. GC SHALL PROVIDE ENGINEERED SHOP DRAWINGS AND CALCULATIONS, SIGNED AND SEALED BY A P.E. LICENSED IN THE STATE OF FLORIDA, SHOWING CURB DESIGN, DETAILS OF CURB TO ROOF AND CONDENSER TO CURB ATTACHMENT, ETC.
10. CONDENSING UNITS ON ROOF SHALL BE INSTALLED IN ACCORDANCE WITH MANUFACTURER'S INSTRUCTION AND THE WIND RESISTANCE REQUIREMENTS OF THE FLORIDA BUILDING CODE SECTION 1620.
11. NON-PENETRATING EQUIPMENT SUPPORTS SHALL BE MODEL RTSEQ-MDF w/ BASE AS COORDINATED WITH STRUCT DWGS. RTS ORDER CONTACT: ALEC FARRELL - PHONE 800-285-3056 EMAIL ALEC.FARRELL@EBERLEIRON.COM
12. REFER TO RESPONSIBILITY SCHEDULES FOR ROOF SCOPE.

ROOF AREA (FLAT ROOF AREA ONLY - PARAPETS EXCLUDED)

	SQUARE FEET
MAIN ROOF AREA	18,713
CANOPY ROOF AREA	951
HIGH ROOF AREA	431
TOTAL ROOF AREA	20,095

PLOTTED: 7/29/2025 9:43 AM

APD ENGINEERING ARCHITECTURE
615 Fishers Run Victor, NY 14564
585.742.2222 - www.apd.com

Copyright © 2024
APD Engineering & Architecture
615 Fishers Run
Victor, NY 14564

Drawing Alteration

It is a violation of law for any person, unless acting under the direction of licensed Architect, Professional Engineer, Landscape Architect, or Land Surveyor to alter any item on this document in any way. Any licensee who alters this document is required by law to affix his or her seal and to add the notation "Altered By" followed by his or her signature and the specific description of the alteration or revision.

DO NOT SCALE PLANS

Copying, Printing, Software and other processes required to produce these prints can stretch or shrink the actual paper or layout. Therefore, scaling of this drawing may be inaccurate. Contact APD E&A with any need for additional dimensions or clarifications.

Issued:		Date:
A	Issued for Permit	07/08/24
B	Issued for Bid	07/29/25
C		
D		
E		

Revisions:		Date:
1	Owner Changes	11/18/24
2	Owner Changes	07/29/25
3		
4		
5		
6		
7		
8		
9		
10		
11		
12		

PROJECT ARCHITECT/ENGINEER
Daniel Sargent

PROJECT LEAD
John Lynch

NOT FOR CONSTRUCTION

Seal | Seal

ALDI Inc.
1171 North State Road 7
Royal Palm Beach, FL 33411
(561) 640-8000

ALDI Inc. Store #: 50
Coconut Crossing, FL 1
12850 Northlake Boulevard
Palm Beach Gardens, FL 33412
Palm Beach County

Project Name & Location:

Roof Plan

Drawing Name:

Prototype: V7.08 LHRD	Project No. 22-0267A
Type: GROUND UP	
Drawn By: JWL	A-121
Scale: As Noted	Drawing No.

COCONUT CROSSING, FL AREA SUMMARY		
OCCUPANCY USE	ROOM NAME	SQUARE FOOTAGE
MERCANTILE (M)	SALES / VESTIBULE	12,623
	UNISEX 2	96
	UNISEX 1	96
	HALL	120
SUBTOTAL (MERCANTILE)		12,935
BUSINESS (B)	OFFICE	258
	BREAK ROOM	309
	eCOMMERCE	401
	CLOSET	36
SUBTOTAL (BUSINESS)		1004
STORAGE / STOCK (S-2)	BACKROOM	2,568
	COOLER	1,338
	FREEZER	647
SUBTOTAL (STORAGE / STOCK)		4,553
SUBTOTAL (OCCUPANCIES)		18,492
EXTERIOR /INTERIOR WALLS / UNOCCUPIED SPACE		908
BUILDING SQUARE FOOTAGE		19,400
EXTERIOR CANOPY		987
TOTAL SQUARE FOOTAGE (INCLUDING CANOPY)		20,387

REAR DOCK OPERATIONS DATA	
ITEM	COCONUT CROSSING, FL
LINEAR FOOTAGE OF BASE (PRODUCE INCLUDED)	803'-2"
ASSUMED PALLET STORAGE	57
BUILDING DIMENSIONS	119'-4" x 162'-8"
SALES FLOOR DIMENSIONS	74'-10" x 151'-1"
LENGTH OF MULTIDECK	120'
COOLER MILK DOORS	4
COOLER GENERAL DOORS	12
FREEZER GENERAL DOORS	16
SPOT MERCHANDISERS	10
CART STORAGE	128

NOTES:
1. THIS DRAWING IS FOR GENERAL FIXTURING LAYOUT AND REFERENCE TO EQUIPMENT ONLY. ALL INFORMATION IS FOR ALDI OPERATIONAL USE ONLY AND SHALL NOT BE USED FOR CONSTRUCTION OR BIDDING PURPOSES.
2. ALL DIMENSIONS TO WALLS ARE TO FACE OF STUD UNLESS NOTED OTHERWISE.
3. THIS FACILITY DOES NOT CONTAIN A BAKERY, A BUTCHER, A DELI OR FISH COUNTER.
4. ALL FOOD IS PREPACKAGED. THERE IS NO ON SITE FOOD PREPARATION.
5. GONDOLA LOCATIONS ARE MEASURED FROM THE FACE OF THE STAINLESS STEEL PRICE TAG MOLDING (SSPTM).

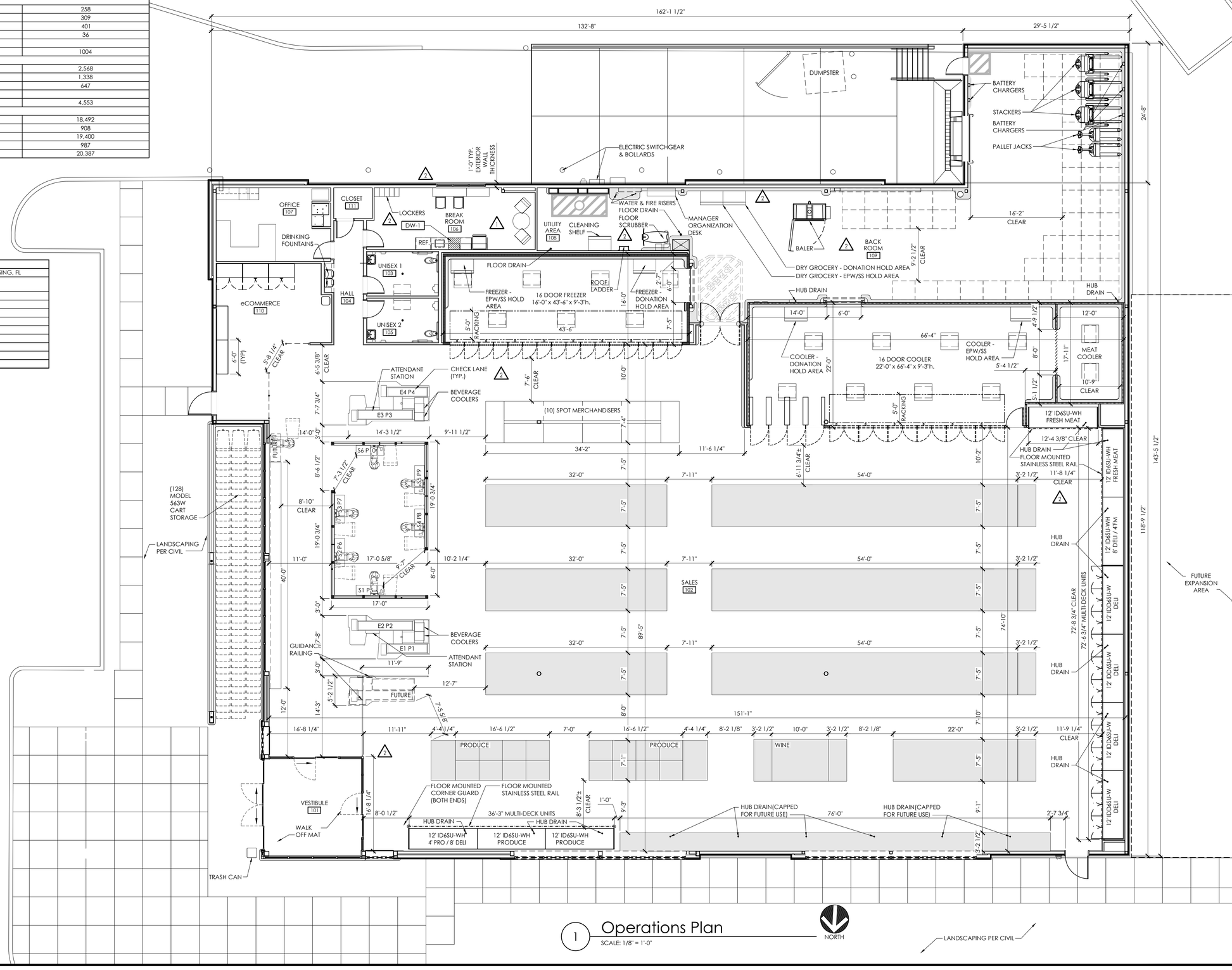

1 Operations Plan
SCALE: 1/8" = 1'-0"

PLOTTED: 7/29/2025 9:43 AM

APD ENGINEERING ARCHITECTURE
615 Fishers Run Victor, NY 14564
585.742.2222 - www.apd.com

Copyright © 2024
APD Engineering & Architecture
615 Fishers Run
Victor, NY 14564

Drawing Alteration

It is a violation of law for any person, unless acting under the direction of licensed Architect, Professional Engineer, Landscape Architect, or Land Surveyor to alter any item on this document in any way. Any licensee who alters this document is required by law to affix his or her seal and to add the notation "Altered By" followed by his or her signature and the specific description of the alteration or revision.

DO NOT SCALE PLANS

Copying, Printing, Software and other processes required to produce these prints can stretch or shrink the actual paper or layout. Therefore, scaling of this drawing may be inaccurate. Contact APD E&A with any need for additional dimensions or clarifications.

Issued:		Date:
A	Issued for Permit	07/08/24
B	Issued for Bid	07/29/25
C		
D		
E		

Revisions:		Date:
1	Owner Changes	11/18/24
2	Owner Changes	07/29/25
3		
4		
5		
6		
7		
8		
9		
10		
11		
12		

PROJECT ARCHITECT/ENGINEER
Daniel Sargent

PROJECT LEAD
John Lynch

NOT FOR CONSTRUCTION

Seal Seal

ALDI Inc.
1171 North State Road 7
Royal Palm Beach, FL 33411
(561) 640-8000

ALDI Inc. Store #: 50
Coconut Crossing, FL 1
12850 Northlake Boulevard
Palm Beach Gardens, FL 33412
Palm Beach County

Project Name & Location:

Operations Plan

Drawing Name:

Prototype: V7.08 LHRD	Project No. 22-0267A
Type: GROUND UP	
Drawn By: JWL	A-131
Scale: As Noted	Drawing No.

EXTERIOR FINISH SCHEDULE

KEY	MATERIAL / MFG.	COLOR / NO.	NOTES
A1	PREFINISHED METAL ROOF EDGE TERMINATION	A1- SILVER - AT HIGH ROOF & CANOPY A1b - AGED BRONZE - AT NICHIHA A1c - GRANITE - AT EIFS	SEE SPECIFICATIONS APPENDIX 'B'
A2	MASONRY STONE VENEER (MSV) / BORAL CULTURED STONE	PROFIT LEDGESTONE - SOUTHWEST BLEND	
A3	PREFINISHED ALUM. SILL FLASHING	A3- BRIGHT SILVER A3a - PETERSEN ALUMINUM - 'AGED BRONZE'	SEE SPEC FOR ADDITIONAL INFO; NOTE AGED BRONZE IS CUSTOM COLOR PAINT ON POST FORMED ALUMINUM.
A4	ALUMINUM STOREFRONT SYSTEM	ANODIZED ALUM.	RE: DWG. A602
A5	MEMBRANE ROOFING	GRAY	TOP OF SLOPED ROOF, CANOPY ROOF, AND BACK OF RAISED ROOF PROJECTIONS - SEE SPECIFICATIONS APPENDIX 'B'
A6	METAL SOFFIT PANELS	SOLID PANELS - SILVER METALLIC	RE: DWG. A301-A304
A7	EXTERIOR PAINT		RE: DWG. A603
A8	POST MOUNTED GREEN SCREEN	FACTORY FINISH	GREEN SCREEN WELDED WIRE TRELLIS SYSTEM - SEE SPEC.
A9	ALUMINUM COMPOSITE PANEL	BRIGHT SILVER	PROVIDE PANEL JOINTS AS SHOWN - PROVIDE ONE PIECE TIGHT FIT EXTRUDED MOLDING INSTALLATION SYSTEM WITH CENTER REVEAL TRIM BETWEEN PANELS AND J TRIM AT PANEL EDGES.
A10	NICHIHA FIBER CEMENT EXTERIOR CLADDING	VINTAGEWOOD 'BARK'	CONTACT NICHIHA AT 770-805-9466 FOR ORDERING. SEE SPEC FOR TRIM REQUIREMENTS AND ADDITIONAL INFO. ALL INCLUDED TRIM ('H', 'J', 'L', CORNER, ETC) TO MATCH FCP
A11	BLRD-2	PT-19 / CL-4	RE: DWG A603
A12	BLRD-4		RE: DWG A603
A13	GUARD RAIL TYPE "A"	GALVANIZED STEEL	RE: DETAIL B2/A507
A14	GUARD RAIL TYPE "B"	GALVANIZED STEEL	RE: DETAIL B2/A507
A15	BLRD-3	GALVANIZED	RE: DWG A603
A16	DOCK LEVELER / SEAL AND BUMPERS	LEVELER - FACTORY FINISH / SEAL AND BUMPERS - FACTORY FINISH - BLACK	RE: DETAIL 9/A601 FOR CONDITION BEHIND SEAL
A17	MASONRY CONTROL JOINT		MAX 20' OC
A18	16" OVERFLOW SCUPPER 4	PT-19 / CL-9	RE. DWG. A2/A507
A19	WATER TABLE-SILL / CULTURED STONE	16"X20"X2"-2 3/4" (AT PEAK) FLAGSTONE / CHAMPAGNE	SEE SPEC FOR ADDITIONAL INFORMATION; RE: DWG B3b/A503
A20	ALDI TOWER SIGN	BY SIGN VENDOR	VERIFY SIGN SIZE PRIOR TO FRAMING OPENING SEE DETAIL B2/A505 1
A21	CRTB	NATURAL	RE: DWG A603 - SEE STRUCTURAL DWGS
A22	KNOX BOX	FACTORY FINISH	CONFIRM TYPE AND LOCATION WITH LOCAL FIRE MARSHAL
A23	AUTO DOOR SYSTEM & TRANSOM	ANODIZED ALUMINUM	RE. DWG A601 & A602

EXTERIOR FINISH SCHEDULE

KEY	MATERIAL / MFG.	COLOR / NO.	NOTES
A24	SLOPED WALL CAP / CULTURED STONE	16"X20"X2"-2 3/4" (AT PEAK) FLAGSTONE / CHAMPAGNE	SEE SPEC FOR ADDITIONAL INFORMATION
A25	8" X 8" PRE-FINISHED ALUM GUTTER	MATCH PREFINISHED METAL COPING	RE: DETAIL C3/A501
A26	8" X 8" PRE-FINISHED ALUM DOWNSPOUT	MATCH PREFINISHED METAL COPING	RE: DETAIL C3/A501 TERMINATE AT CONC. SPLASH BLOCK
A27	ACP H/J TRIM / JOINT COVER		TYPICAL AT EDGES AND BUTT JOINTS OF ACP
A28	FIBER CEMENT PANEL BASE FLASHING	PETERSEN ALUMINUM - 'AGED BRONZE'	
A29	DRYVIT SYSTEMS, INC EXTERIOR INSULATION FINISH SYSTEM	A29a - MATCH DRYVIT COLOR #104 - 'DOVER SKY' A29b - MATCH DRYVIT COLOR #449 - 'BUCKSKIN'	SEE SPEC FOR ADDITIONAL INFO
A30	DUMPSTER GATE	CLAM SHELL	RE. DWG A507
A31	NICHIHA CONTROL JOINT WITH "H" CLIP		
A32	3/4" ESTHETIC EIFS "V" GROVE		
A33	EIFS EXPANSION JOINT		MAX 75' OC
A34	MECHANICAL SCREEN	PT-19 / PAINT COLOR TO MATCH DRYVIT COLOR #104 DOVER SKY	SEE STRUCT DWGS
A35	SMOOTH FACE CMU		PROVIDE SMOOTH FACE CMU FROM FINISHED FLOOR TO FOOTING INSIDE FULL INSIDE PERIMETER OF TRUCK WELL
4 A36	ALUMINUM BRAKE METAL CLOSURE	ANODIZED ALUM.	RE. DWG. A505
E1	NOT USED		
E2	WALL SCONCE	FACTORY FINISH	MOUNT @ 14'-8" A.F.S.; RE: DWG. A111 FOR DIMENSIONS
E3	JUNCTION BOX WITH COVER FOR FUTURE CARD READER		MOUNT CENTERED @ 46" A.F.S., SEE ELEC DWGS
E4	UTILITY METERING & C.T.	FACTORY FINISH	SEE ELECTRICAL DWGS
E5	EXTERIOR WALL PACK	FACTORY FINISH	MAN DOORS - MOUNT @ 8'-0" A.F.S., BREAK ROOM WINDOW @ 10'-0" A.F.S. TRUCK WELL - MOUNT @ 12'-0" A.F.S. (SIDE DOCK ONLY)
E6	EXTERIOR DUPLEX RECEPTACLE	FACTORY FINISH	MOUNT @ 1'-6" A.F.S. IN 4" SQUARE J-BOX
E7	GENERATOR QUICK CONNNECT	FACTORY FINISH	SEE ELECT DWGS
F1	MOTOR GONG	FACTORY FINISH	SEE FIRE PROTECTION DWGS
P1	HOSE BIB	FACTORY FINISH	SEE PLUMBING DWGS
XX	GLAZING KEY		RE: DWG A602
VV	ALIGN KEY		A: ALIGN NICHIHA PANEL JOINTS AND WINDOW MULLIONS B: ALIGN ALUMINUM COMPOSITE PANEL JOINTS AND NICHIHA PANEL JOINTS C: ALIGN NICHIHA PANEL JOINTS, ALUMINUM COMPOSITE PANEL JOINTS, AND WINDOW MULLIONS

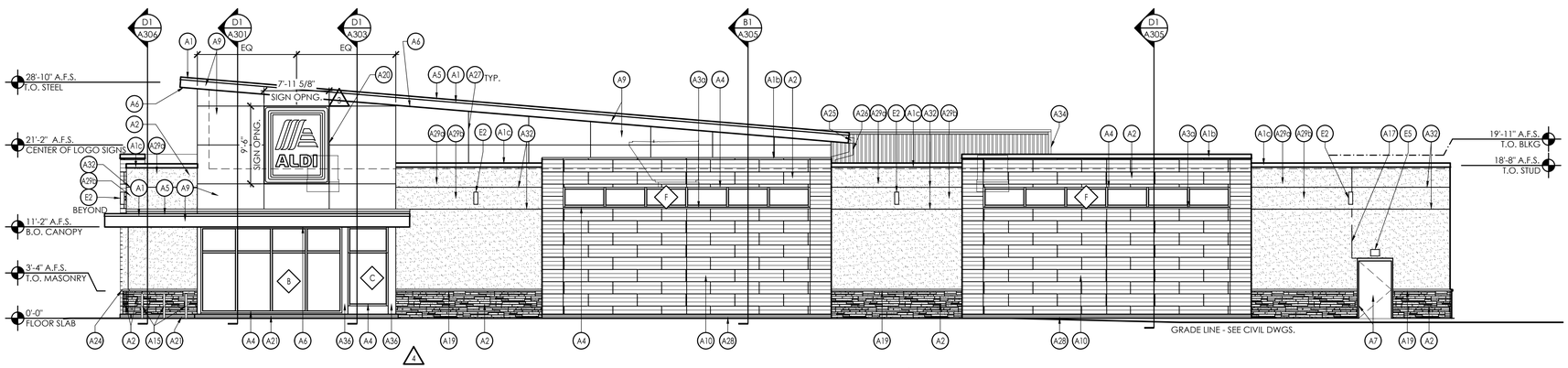

2 North Elevation

SCALE: 1/8" = 1'-0"

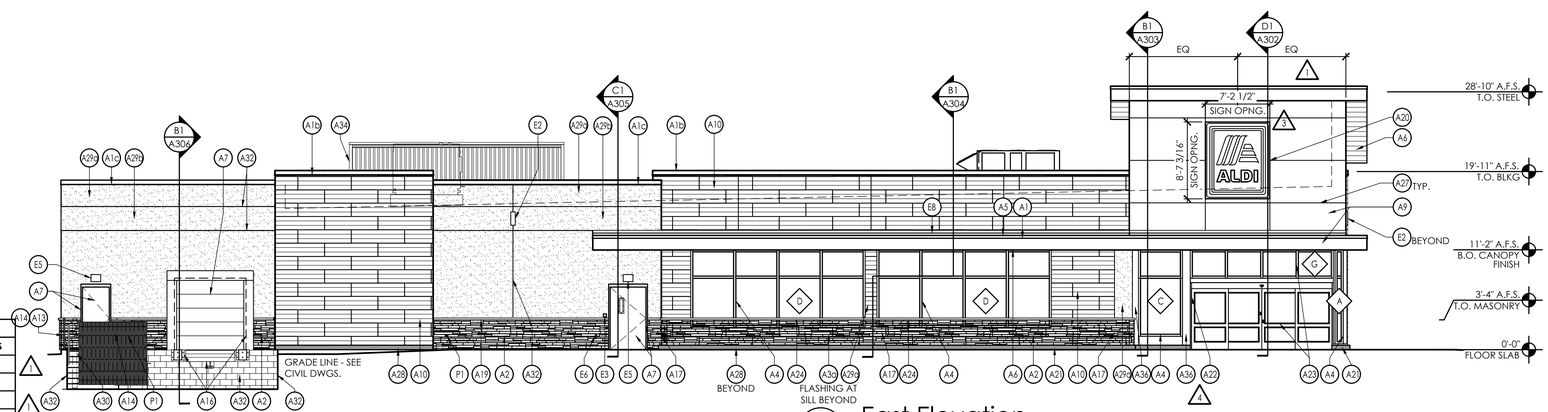

1 East Elevation

SCALE: 1/8" = 1'-0"

SIGNAGE			
DESCRIPTION	QUANTITY	SQ. FT. PER SIGN	TOTALS
NORTH TOWER SIGN	1	74.9	74.9
EAST TOWER SIGN	1	61.98	62.0
TOTAL SIGNAGE			136.9
SIGNAGE IS SHOWN FOR REFERENCE ONLY AND SHALL BE UNDER SEPARATE PERMIT SUBMITTAL			

PLOTTED: 7/29/2025 9:43 AM

APD ENGINEERING ARCHITECTURE
615 Fishers Run Victor, NY 14564
585.742.2222 - www.apd.com

Copyright © 2024
APD Engineering & Architecture
615 Fishers Run
Victor, NY 14564

Drawing Alteration

It is a violation of law for any person, unless acting under the direction of licensed Architect, Professional Engineer, Landscape Architect, or Land Surveyor to alter any item on this document in any way. Any licensee who alters this document is required by law to affix his or her seal and to add the notation "Altered By" followed by his or her signature and the specific description of the alteration or revision.

DO NOT SCALE PLANS

Copying, Printing, Software and other processes required to produce these prints can stretch or shrink the actual paper or layout. Therefore, scaling of this drawing may be inaccurate. Contact APD E&A with any need for additional dimensions or clarifications.

	Issued:	Date:
A	Issued for Permit	07/08/24
B	Issued for Bid	07/29/25
C		
D		
E		

	Revisions:	Date:
1	AHJ Responses	10/08/24
2	Owner Changes	11/18/24
3	AHJ Responses	12/20/24
4	Owner Changes	07/29/25
5		
6		
7		
8		
9		
10		
11		
12		

PROJECT ARCHITECT/ENGINEER
Daniel Sargent

PROJECT LEAD
John Lynch

NOT FOR CONSTRUCTION

Seal Seal

ALDI Inc.
1171 North State Road 7
Royal Palm Beach, FL 33411
(561) 640-8000

ALDI Inc. Store #: 50
Coconut Crossing, FL 2
12850 Northlake Boulevard
Palm Beach Gardens, FL 33412
Palm Beach County
Project Name & Location:

Exterior Elevations
Drawing Name:

Prototype: V7.08 LHRD
Type: GROUND UP
Drawn By: JWL
Scale: As Noted

Project No. 22-0267A

A-201
Drawing No.

EXTERIOR FINISH SCHEDULE

KEY	MATERIAL / MFG.	COLOR / NO.	NOTES
A1	PREFINISHED METAL ROOF EDGE TERMINATION	A1- SILVER - AT HIGH ROOF & CANOPY A1b - AGED BRONZE - AT NICHIHA A1c - GRANITE - AT EIFS	SEE SPECIFICATIONS APPENDIX 'B'
A2	MASONRY STONE VENEER (MSV) / BORAL CULTURED STONE	PROFIT LEDGESTONE - SOUTHWEST BLEND	
A3	PREFINISHED ALUM. SILL FLASHING	A3- BRIGHT SILVER A3a - PETERSEN ALUMINUM - 'AGED BRONZE'	SEE SPEC FOR ADDITIONAL INFO; NOTE AGED BRONZE IS CUSTOM COLOR PAINT ON POST FORMED ALUMINUM.
A4	ALUMINUM STOREFRONT SYSTEM	ANODIZED ALUM.	RE: DWG. A602
A5	MEMBRANE ROOFING	GRAY	TOP OF SLOPED ROOF, CANOPY ROOF, AND BACK OF RAISED ROOF PROJECTIONS - SEE SPECIFICATIONS APPENDIX 'B'
A6	METAL SOFFIT PANELS	SOLID PANELS - SILVER METALLIC	RE: DWG. A301-A304
A7	EXTERIOR PAINT		RE: DWG. A603
A8	POST MOUNTED GREEN SCREEN	FACTORY FINISH	GREEN SCREEN WELDED WIRE TRELLIS SYSTEM - SEE SPEC.
A9	ALUMINUM COMPOSITE PANEL	BRIGHT SILVER	PROVIDE PANEL JOINTS AS SHOWN - PROVIDE ONE PIECE TIGHT FIT EXTRUDED MOLDING INSTALLATION SYSTEM WITH CENTER REVEAL TRIM BETWEEN PANELS AND J TRIM AT PANEL EDGES.
A10	NICHIHA FIBER CEMENT EXTERIOR CLADDING	VINTAGEWOOD 'BARK'	CONTACT NICHIHA AT 770-805-9466 FOR ORDERING. SEE SPEC FOR TRIM REQUIREMENTS AND ADDITIONAL INFO. ALL INCLUDED TRIM ('H', 'J', 'L', CORNER, ETC) TO MATCH FCP
A11	BLRD-2	PT-19 / CL-4	RE: DWG A603
A12	BLRD-4		RE: DWG A603
A13	GUARD RAIL TYPE "A"	GALVANIZED STEEL	RE: DETAIL B2/A507
A14	GUARD RAIL TYPE "B"	GALVANIZED STEEL	RE: DETAIL B2/A507
A15	BLRD-3	GALVANIZED	RE: DWG A603
A16	DOCK LEVELER / SEAL AND BUMPERS	LEVELER - FACTORY FINISH / SEAL AND BUMPERS - FACTORY FINISH - BLACK	RE: DETAIL 9/A601 FOR CONDITION BEHIND SEAL
A17	MASONRY CONTROL JOINT		MAX 20' OC
A18	16" OVERFLOW SCUPPER 4	PT-19 / CL-9	RE. DWG. A2/A507
A19	WATER TABLE-SILL / CULTURED STONE	16"X20"X2"-2 3/4" (AT PEAK) FLAGSTONE / CHAMPAGNE	SEE SPEC FOR ADDITIONAL INFORMATION; RE: DWG B3b/A503
A20	ALDI TOWER SIGN	BY SIGN VENDOR	VERIFY SIGN SIZE PRIOR TO FRAMING OPENING SEE DETAIL B2/A505 1
A21	CRTB	NATURAL	RE: DWG A603 - SEE STRUCTURAL DWGS
A22	KNOX BOX	FACTORY FINISH	CONFIRM TYPE AND LOCATION WITH LOCAL FIRE MARSHAL
A23	AUTO DOOR SYSTEM & TRANSOM	ANODIZED ALUMINUM	RE. DWG A601 & A602

EXTERIOR FINISH SCHEDULE

KEY	MATERIAL / MFG.	COLOR / NO.	NOTES
A24	SLOPED WALL CAP / CULTURED STONE	16"X20"X2"-2 3/4" (AT PEAK) FLAGSTONE / CHAMPAGNE	SEE SPEC FOR ADDITIONAL INFORMATION
A25	8" X 8" PRE-FINISHED ALUM GUTTER	MATCH PREFINISHED METAL COPING	RE: DETAIL C3/A501
A26	8" X 8" PRE-FINISHED ALUM DOWNSPOUT	MATCH PREFINISHED METAL COPING	RE: DETAIL C3/A501 TERMINATE AT CONC. SPLASH BLOCK
A27	ACP H/J TRIM / JOINT COVER		TYPICAL AT EDGES AND BUTT JOINTS OF ACP
A28	FIBER CEMENT PANEL BASE FLASHING	PETERSEN ALUMINUM - "AGED BRONZE"	
A29	DRYVIT SYSTEMS, INC EXTERIOR INSULATION FINISH SYSTEM	A29a - MATCH DRYVIT COLOR #104 - 'DOVER SKY' A29b - MATCH DRYVIT COLOR #449 - 'BUCKSKIN'	SEE SPEC FOR ADDITIONAL INFO
A30	DUMPSTER GATE	CLAM SHELL	RE. DWG A507
A31	NICHIHA CONTROL JOINT WITH "H" CLIP		
A32	3/4" ESTHETIC EIFS "V" GROVE		
A33	EIFS EXPANSION JOINT		MAX 75' OC
A34	MECHANICAL SCREEN	PT-19 / PAINT COLOR TO MATCH DRYVIT COLOR #104 DOVER SKY	SEE STRUCT DWGS
A35	SMOOTH FACE CMU		PROVIDE SMOOTH FACE CMU FROM FINISHED FLOOR TO FOOTING INSIDE FULL INSIDE PERIMETER OF TRUCK WELL
A36	ALUMINUM BRAKE METAL CLOSURE	ANODIZED ALUM.	RE. DWG. A505
E1	NOT USED		
E2	WALL SCONCE	FACTORY FINISH	MOUNT @ 14'-8" A.F.S.; RE: DWG. A111 FOR DIMENSIONS
E3	JUNCTION BOX WITH COVER FOR FUTURE CARD READER		MOUNT CENTERED @ 46" A.F.S., SEE ELEC DWGS
E4	UTILITY METERING & C.T.	FACTORY FINISH	SEE ELECTRICAL DWGS
E5	EXTERIOR WALL PACK	FACTORY FINISH	MAN DOORS - MOUNT @ 8'-0" A.F.S., BREAK ROOM WINDOW @ 10'-0" A.F.S. TRUCK WELL - MOUNT @ 12'-0" A.F.S. (SIDE DOCK ONLY)
E6	EXTERIOR DUPLEX RECEPTACLE	FACTORY FINISH	MOUNT @ 1'-6" A.F.S. IN 4" SQUARE J-BOX
E7	GENERATOR QUICK CONNNECT	FACTORY FINISH	SEE ELECT DWGS
F1	MOTOR GONG	FACTORY FINISH	SEE FIRE PROTECTION DWGS
P1	HOSE BIB	FACTORY FINISH	SEE PLUMBING DWGS
XX	GLAZING KEY		RE: DWG A602
VV	ALIGN KEY		A: ALIGN NICHIHA PANEL JOINTS AND WINDOW MULLIONS B: ALIGN ALUMINUM COMPOSITE PANEL JOINTS AND NICHIHA PANEL JOINTS C: ALIGN NICHIHA PANEL JOINTS, ALUMINUM COMPOSITE PANEL JOINTS, AND WINDOW MULLIONS

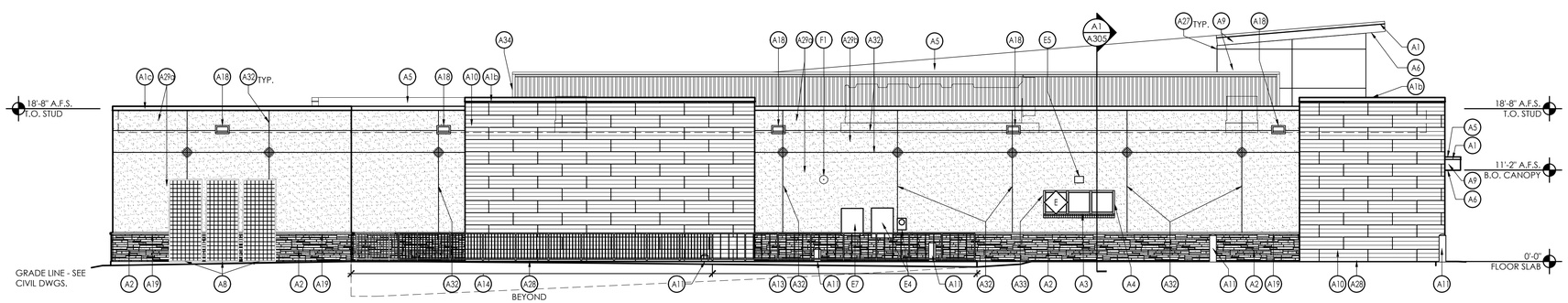

2 South Elevation
SCALE: 1/8" = 1'-0"

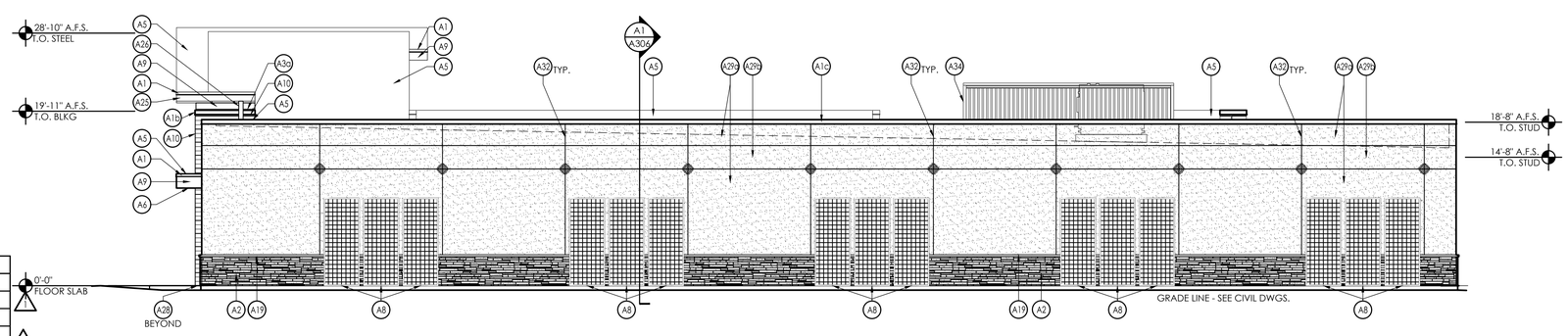

1 West Elevation
SCALE: 1/8" = 1'-0"

SIGNAGE			
DESCRIPTION	QUANTITY	SQ. FT. PER SIGN	TOTALS
NORTH TOWER SIGN	1	74.9	74.9
EAST TOWER SIGN	1	61.98	62.0
TOTAL SIGNAGE			136.9
SIGNAGE IS SHOWN FOR REFERENCE ONLY AND SHALL BE UNDER SEPARATE PERMIT SUBMITTAL			

PLOTTED: 7/29/2025 9:43 AM

APD ENGINEERING ARCHITECTURE
615 Fishers Run Victor, NY 14564
585.742.2222 - www.apd.com

Copyright © 2024
APD Engineering & Architecture
615 Fishers Run
Victor, NY 14564

Drawing Alteration

It is a violation of law for any person, unless acting under the direction of licensed Architect, Professional Engineer, Landscape Architect, or Land Surveyor to alter any item on this document in any way. Any licensee who alters this document is required by law to affix his or her seal and to add the notation "Altered By" followed by his or her signature and the specific description of the alteration or revision.

DO NOT SCALE PLANS

Copying, Printing, Software and other processes required to produce these prints can stretch or shrink the actual paper or layout. Therefore, scaling of this drawing may be inaccurate. Contact APD E&A with any need for additional dimensions or clarifications.

	Issued:	Date:
A	Issued for Permit	07/08/24
B	Issued for Bid	07/29/25
C		
D		
E		

	Revisions:	Date:
1	AHJ Responses	10/08/24
2	Owner Changes	11/18/24
3	AHJ Responses	12/20/24
4	Owner Changes	07/29/25
5		
6		
7		
8		
9		
10		
11		
12		

PROJECT ARCHITECT/ENGINEER
Daniel Sargent

PROJECT LEAD
John Lynch

NOT FOR CONSTRUCTION

Seal Seal

ALDI Inc.
1171 North State Road 7
Royal Palm Beach, FL 33411
(561) 640-8000

ALDI Inc. Store #: 50
Coconut Crossing, FL 2
12850 Northlake Boulevard
Palm Beach Gardens, FL 33412
Palm Beach County
Project Name & Location:

Exterior Elevations
Drawing Name:

Prototype: V7.08 LHRD
Type: GROUND UP
Drawn By: JWL
Scale: As Noted

Project No. 22-0267A

A-202
Drawing No.

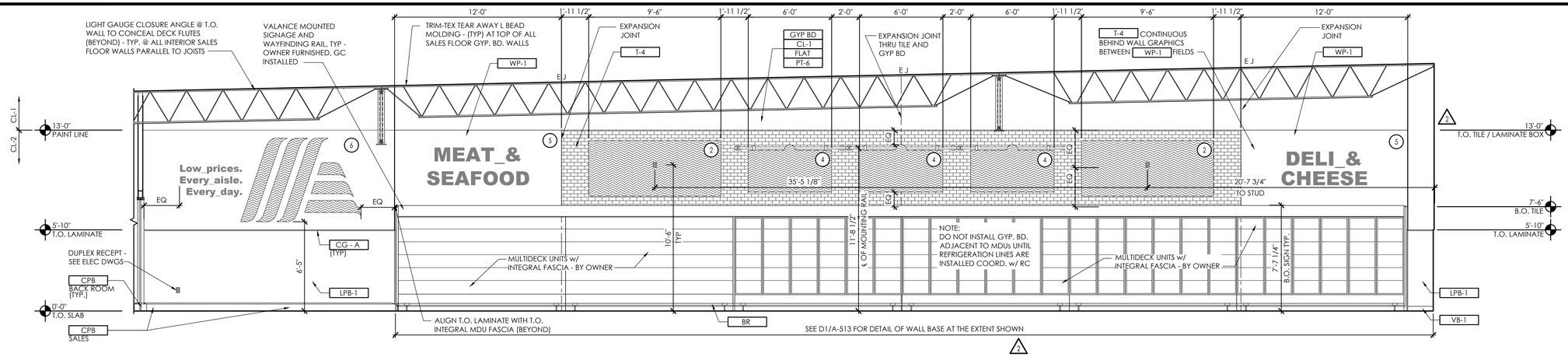

C3 Sales #102

SCALE: 1/4" = 1'-0"

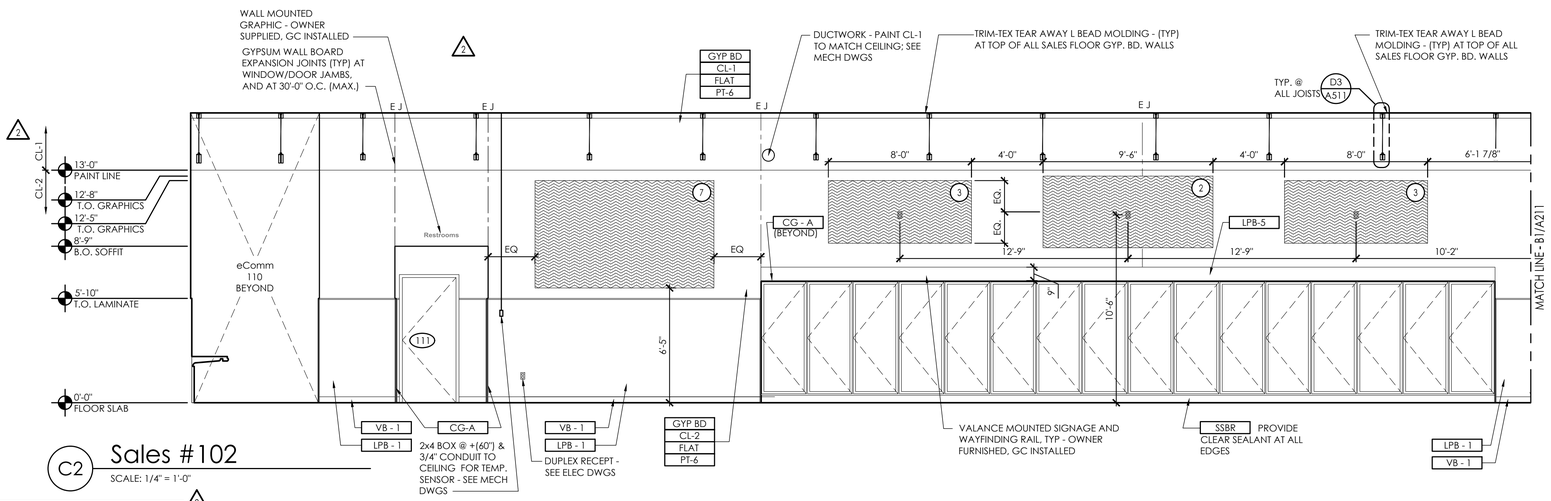

C2 Sales #102

SCALE: 1/4" = 1'-0"

SALES FLOOR GRAPHICS SCHEDULE			
KEY	KEY DESCRIPTION	MANUFACTURER	NOTES
1	ILLUMINATED WALL MTD. GRAPHIC - PRODUCE	OWNER FURNISHED CONTRACTOR INSTALLED	216"W x 48"H - FIRST AISLE
2	ILLUMINATED WALL MTD. GRAPHIC - PHOTOGRAPHY	OWNER FURNISHED CONTRACTOR INSTALLED	114"W x 48"H - FIRST AISLE, ABOVE MDUS, COOLER AND FREEZER WALLS
3	WALL MTD. GRAPHIC - WAYFINDING	OWNER FURNISHED CONTRACTOR INSTALLED	96"W x 42"H - FIRST AISLE, COOLER AND FREEZER WALLS
4	WALL MTD. GRAPHIC w/ MOUNTING RAIL - MDU WALL WAYFINDING	OWNER FURNISHED CONTRACTOR INSTALLED	72"W x 40 7/8"H - BACK WALL ABOVE MDUS PROVIDE CONTINUOUS 2X6 WD BLKG IN WALL FOR FOR MOUNTING RAIL BRACKET ATTACHMENT FOR ENTIRE LENGTH OF RAIL.
5	WALL MTD. CHANNEL LETTERS - MDU WALL WAYFINDING	OWNER FURNISHED CONTRACTOR INSTALLED	VIF x 17"H - LETTERS REFER TO A-603 FOR WP-1 INFO
6	WALL MTD GRAPHIC - LOGO AND TAGLINES	OWNER FURNISHED CONTRACTOR INSTALLED	102.875"W x 72"H - LOGO VIF x 7"H - LETTERS COORDINATE INSTALLATION WITH CLIENT
7	WALL MTD GRAPHIC - CR MURAL	OWNER FURNISHED CONTRACTOR INSTALLED	120"W x 72"H - ADJACENT TO FREEZER
8	WALL MTD GRAPHIC - SACKING COUNTER	OWNER FURNISHED CONTRACTOR INSTALLED	47 1/2" x 36 3/8"
9	ILLUMINATED GRAPHIC - VERTICAL MESSAGE	OWNER FURNISHED CONTRACTOR INSTALLED	VIF OPENING TO ALLOW FOR FRAME TO BE INSTALLED WITHIN WALL ASSEMBLY

GENERAL NOTES:

1. ALL WALLS TO BE CLEANED AFTER PAINTING OF CEILING TO REMOVE DRYFALL PAINT RESIDUE. COMPLETE CLEANING PRIOR TO INSTALLATION OF OWNER FURNISHED GRAPHICS PACKAGE.

2. REFER TO DRAWING A-603 FOR ALL FINISH CALL-OUTS.

3. GC TO INSTALL OWNER FURNISHED INTERIOR GRAPHICS AND MILLWORK PACKAGE. REFER TO INSTALLATION INSTRUCTIONS AND CUT SHEETS POSTED TO WWW.SHARENOLOGY.COM
INTERIOR GRAPHICS:
VENDOR INFO > SBPI INTERIOR GRAPHICS
MILLWORK:
VENDOR INFO > RIDDLEY CABINET CO INC
VENDOR INFO > KPI CONCEPTS INC

4. COORDINATE LOCATIONS OF ALL EXPANSION JOINTS WITH THE GRAPHICS PACKAGE TO MINIMIZE INTERFERENCE WITH THE GRAPHICS.

5. ALL SALES AREA WALLS TO BE FREE OF ABANDONED DEVICE BOXES AND NO BLANK COVER PLATES ARE TO BE EXPOSED.

6. COORDINATE LAYOUT OF REFRIGERATION LINES WITH REFRIGERATION CONTRACTOR BEFORE ENCLOSING WALL CAVITY.

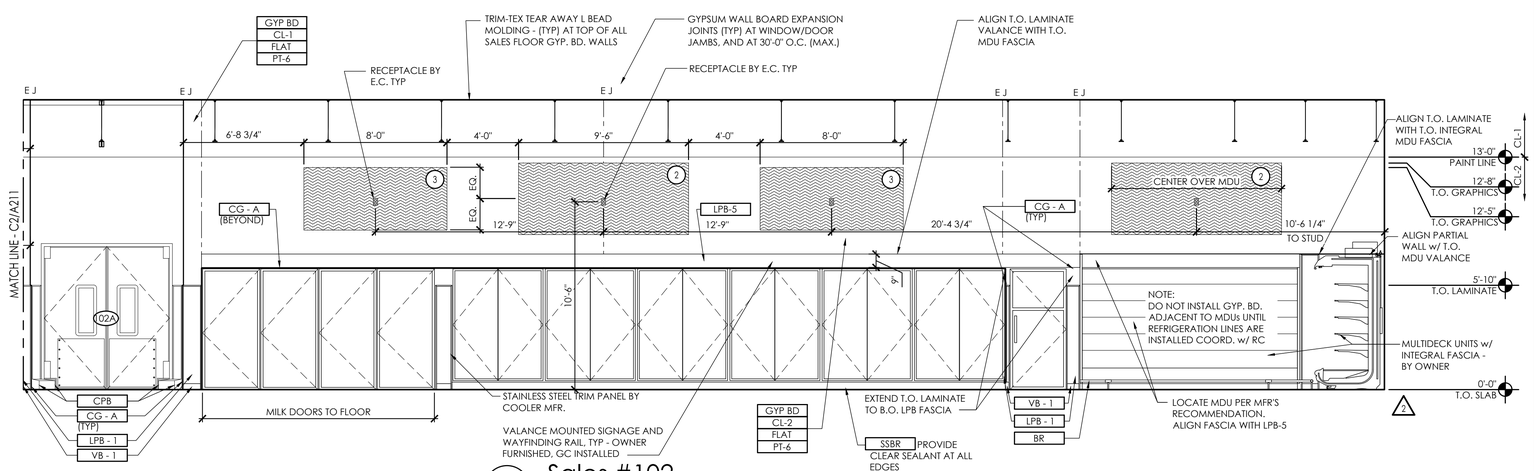

B1 Sales #102

SCALE: 1/4" = 1'-0"

APD ENGINEERING ARCHITECTURE
615 Fishers Run Victor, NY 14564
585.742.2222 - www.apd.com

Copyright © 2024
APD Engineering & Architecture
615 Fishers Run
Victor, NY 14564

3

Drawing Alteration

It is a violation of law for any person, unless acting under the direction of licensed Architect, Professional Engineer, Landscape Architect, or Land Surveyor to alter any item on this document in any way. Any licensee who alters this document is required by law to affix his or her seal and to add the notation "Altered By" followed by his or her signature and the specific description of the alteration or revision.

DO NOT SCALE PLANS

Copying, Printing, Software and other processes required to produce these prints can stretch or shrink the actual paper or layout. Therefore, scaling of this drawing may be inaccurate. Contact APD E&A with any need for additional dimensions or clarifications.

2

Issued:		Date:
A	Issued for Permit	07/08/24
B	Issued for Bid	07/29/25
C		
D		
E		

Revisions:		Date:
1	Owner Changes	11/18/24
2	Owner Changes	07/29/25
3		
4		
5		
6		
7		
8		
9		
10		
11		
12		

PROJECT ARCHITECT/ENGINEER
Daniel Sargent

PROJECT LEAD
John Lynch

NOT FOR CONSTRUCTION

Seal | Seal

1

ALDI Inc.
1171 North State Road 7
Royal Palm Beach, FL 33411
(561) 640-8000

ALDI Inc. Store #: 50
Coconut Crossing, FL
12850 Northlake Boulevard
Palm Beach Gardens, FL 33412
Palm Beach County
Project Name & Location:

Interior Elevations
Drawing Name:

Prototype: V7.08 LHRD	Project No.
Type: GROUND UP	22-0267A
Drawn By: JWL	A-211
Scale: As Noted	Drawing No.

PLOTTED: 7/29/2025 9:44 AM

D | C | B | A

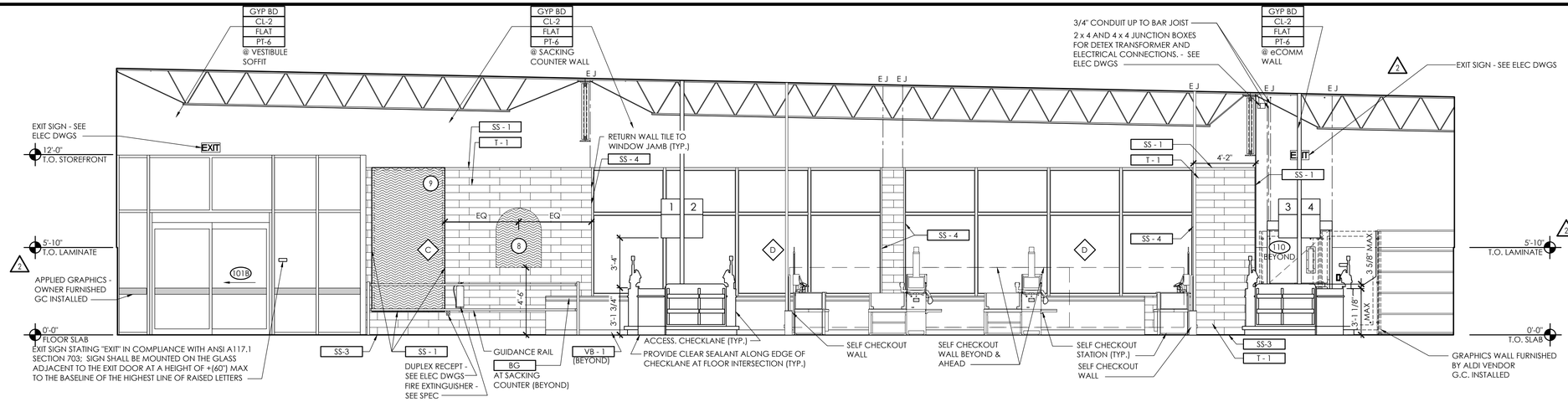

D3 Sales #102

SCALE: 1/4" = 1'-0"

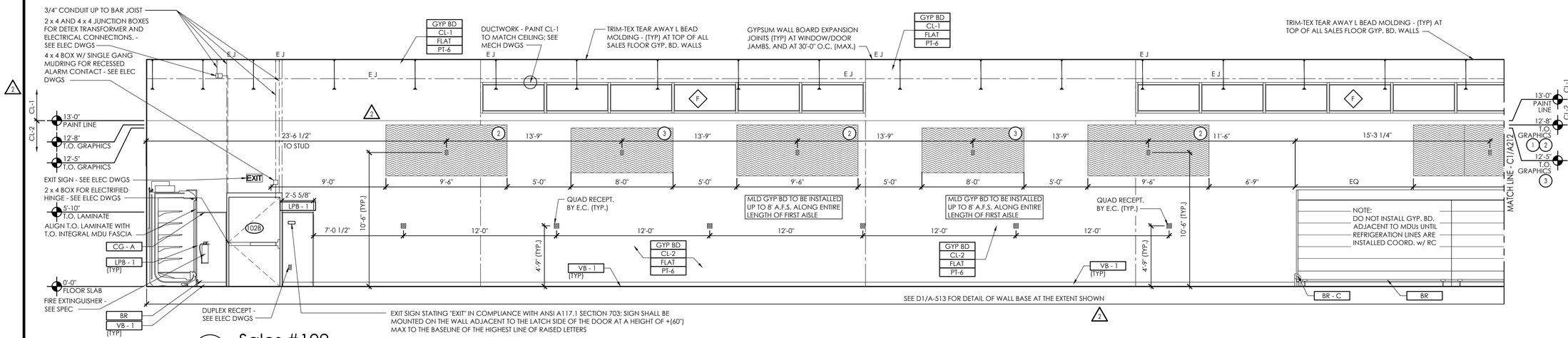

D2 Sales #102

SCALE: 1/4" = 1'-0"

SALES FLOOR GRAPHICS SCHEDULE

KEY	KEY DESCRIPTION	MANUFACTURER	NOTES
1	ILLUMINATED WALL MTD. GRAPHIC - PRODUCE	OWNER FURNISHED CONTRACTOR INSTALLED	216"W x 48"H - FIRST AISLE
2	ILLUMINATED WALL MTD. GRAPHIC - PHOTOGRAPHY	OWNER FURNISHED CONTRACTOR INSTALLED	114"W x 48"H - FIRST AISLE, ABOVE MDUS, COOLER AND FREEZER WALLS
3	WALL MTD. GRAPHIC - WAYFINDING	OWNER FURNISHED CONTRACTOR INSTALLED	96"W x 42"H - FIRST AISLE, COOLER AND FREEZER WALLS
4	WALL MTD. GRAPHIC w/ MOUNTING RAIL - MDU WALL WAYFINDING	OWNER FURNISHED CONTRACTOR INSTALLED	72"W x 40 7/8"H - BACK WALL ABOVE MDUS PROVIDE CONTINUOUS 2X6 WD BLKG IN WALL FOR FOR MOUNTING RAIL BRACKET ATTACHMENT FOR ENTIRE LENGTH OF RAIL.
5	WALL MTD. CHANNEL LETTERS - MDU WALL WAYFINDING	OWNER FURNISHED CONTRACTOR INSTALLED	VIF x 17"H - LETTERS REFER TO A-603 FOR WP-1 INFO
6	WALL MTD GRAPHIC - LOGO AND TAGLINES	OWNER FURNISHED CONTRACTOR INSTALLED	102.875"W x 72"H - LOGO VIF x 7"H - LETTERS COORDINATE INSTALLATION WITH CLIENT
7	WALL MTD GRAPHIC - CR MURAL	OWNER FURNISHED CONTRACTOR INSTALLED	120"W x 72"H - ADJACENT TO FREEZER
8	WALL MTD GRAPHIC - SACKING COUNTER	OWNER FURNISHED CONTRACTOR INSTALLED	47 1/2" x 36 3/8"
9	ILLUMINATED GRAPHIC - VERTICAL MESSAGE	OWNER FURNISHED CONTRACTOR INSTALLED	VIF OPENING TO ALLOW FOR FRAME TO BE INSTALLED WITHIN WALL ASSEMBLY

GENERAL NOTES:

1. ALL WALLS TO BE CLEANED AFTER PAINTING OF CEILING TO REMOVE DRYFALL PAINT RESIDUE. COMPLETE CLEANING PRIOR TO INSTALLATION OF OWNER FURNISHED GRAPHICS PACKAGE.

2. REFER TO DRAWING A-603 FOR ALL FINISH CALL-OUTS.

3. GC TO INSTALL OWNER FURNISHED INTERIOR GRAPHICS AND MILLWORK PACKAGE. REFER TO INSTALLATION INSTRUCTIONS AND CUT SHEETS POSTED TO WWW.SHARENOLOGY.COM
INTERIOR GRAPHICS:
VENDOR INFO > SBPI INTERIOR GRAPHICS
MILLWORK:
VENDOR INFO > RIDDLEY CABINET CO INC
VENDOR INFO > KPI CONCEPTS INC

4. COORDINATE LOCATIONS OF ALL EXPANSION JOINTS WITH THE GRAPHICS PACKAGE TO MINIMIZE INTERFERENCE WITH THE GRAPHICS.

5. ALL SALES AREA WALLS TO BE FREE OF ABANDONED DEVICE BOXES AND NO BLANK COVER PLATES ARE TO BE EXPOSED.

6. COORDINATE LAYOUT OF REFRIGERATION LINES WITH REFRIGERATION CONTRACTOR BEFORE ENCLOSING WALL CAVITY.

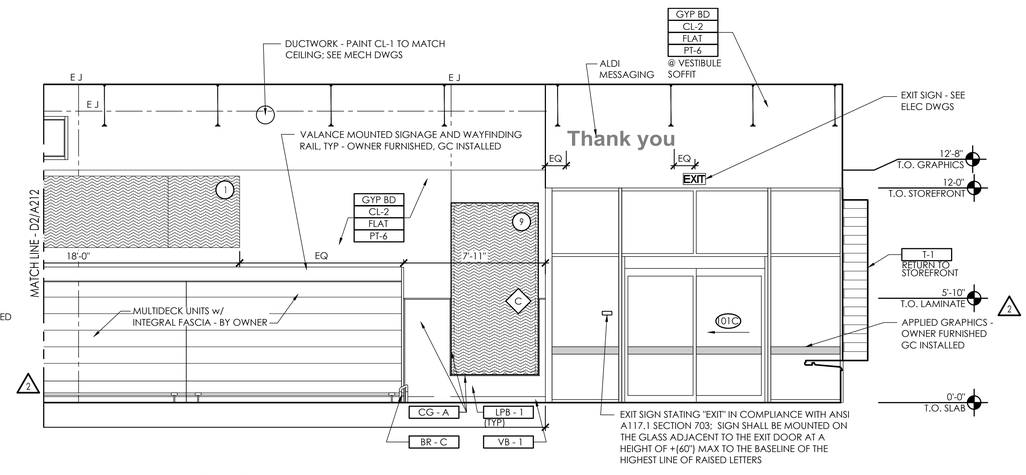

C1 Sales #102

SCALE: 1/4" = 1'-0"

APD ENGINEERING ARCHITECTURE
615 Fishers Run Victor, NY 14564
585.742.2222 - www.apd.com

Copyright © 2024
APD Engineering & Architecture
615 Fishers Run
Victor, NY 14564

Drawing Alteration

It is a violation of law for any person, unless acting under the direction of licensed Architect, Professional Engineer, Landscape Architect, or Land Surveyor to alter any item on this document in any way. Any licensee who alters this document is required by law to affix his or her seal and to add the notation "Altered By" followed by his or her signature and the specific description of the alteration or revision.

DO NOT SCALE PLANS

Copying, Printing, Software and other processes required to produce these prints can stretch or shrink the actual paper or layout. Therefore, scaling of this drawing may be inaccurate. Contact APD E&A with any need for additional dimensions or clarifications.

Issued:		Date:
A	Issued for Permit	07/08/24
B	Issued for Bid	07/29/25
C		
D		
E		

Revisions:		Date:
1	Owner Changes	11/18/24
2	Owner Changes	07/29/25
3		
4		
5		
6		
7		
8		
9		
10		
11		
12		

PROJECT ARCHITECT/ENGINEER
Daniel Sargent

PROJECT LEAD
John Lynch

NOT FOR CONSTRUCTION

Seal | Seal

ALDI Inc.
1171 North State Road 7
Royal Palm Beach, FL 33411
(561) 640-8000

ALDI Inc. Store #: 50
Coconut Crossing, FL
12850 Northlake Boulevard
Palm Beach Gardens, FL 33412
Palm Beach County
Project Name & Location:

Interior Elevations
Drawing Name:

Prototype: V7.08 LHRD	Project No. 22-0267A
Type: GROUND UP	
Drawn By: JWL	A-212
Scale: As Noted	Drawing No.

PLOTTED: 7/29/2025 9:44 AM

D | C | B | A

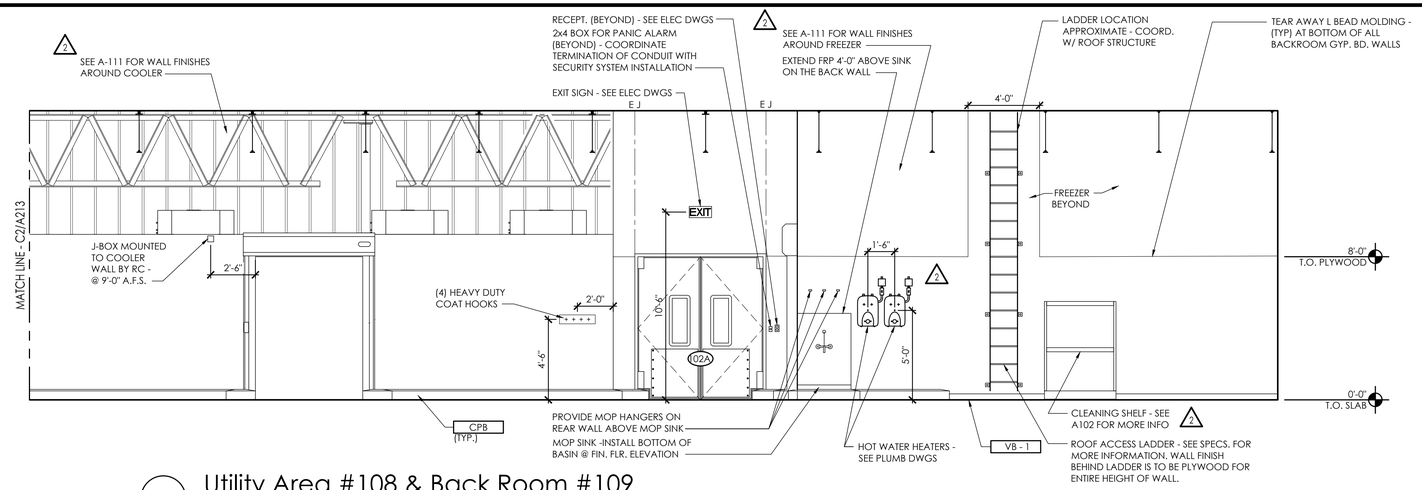

C3 Utility Area #108 & Back Room #109

SCALE: 1/4" = 1'-0"

NOTES:

1. REFER TO DRAWING A-603 FOR ALL FINISH CALL-OUTS
2. VERIFY THE LOCATION OF ELECTRICAL OUTLETS WITH ELECTRICAL PLANS BEFORE INSTALLATION. IF THERE IS A CONFLICT, NOTIFY OWNER PRIOR TO ANY WORK.

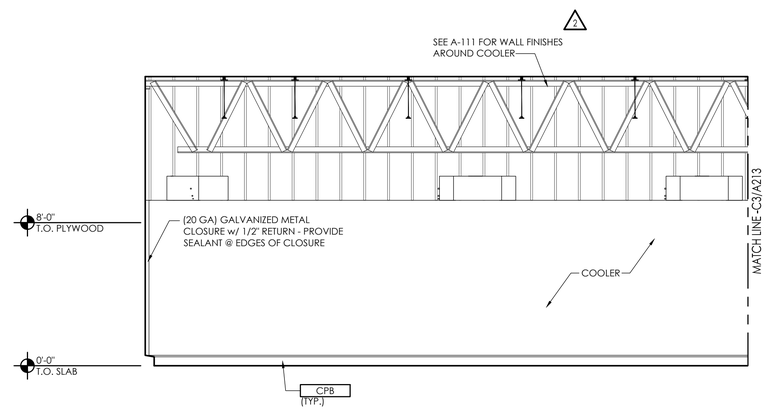

C2 Back Room #109

SCALE: 1/4" = 1'-0"

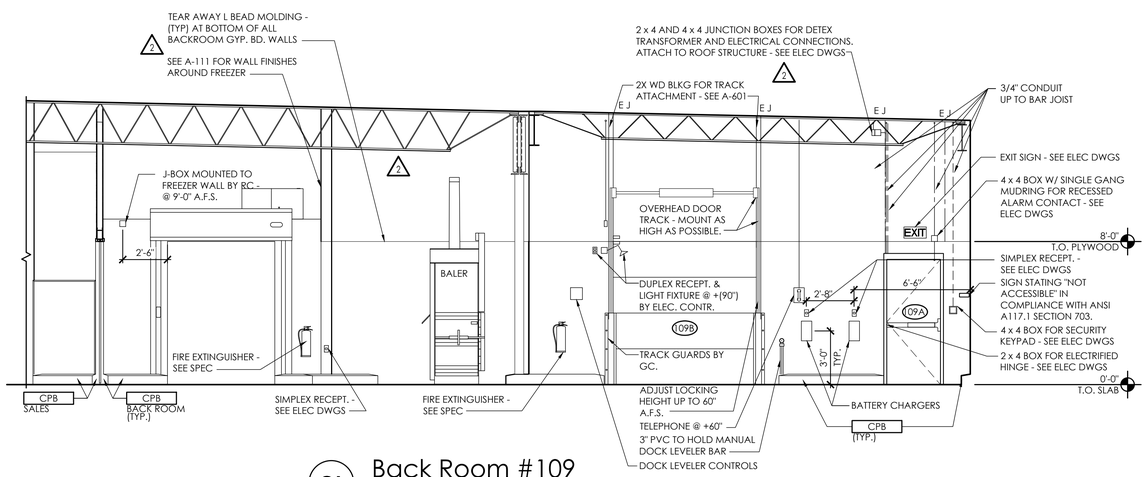

C1 Back Room #109

SCALE: 1/4" = 1'-0"

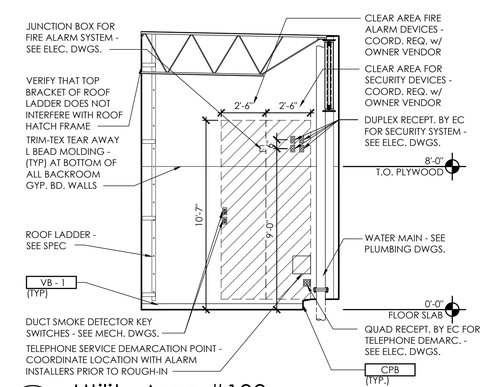

A1 Utility Area #108

SCALE: 1/4" = 1'-0"

APD ENGINEERING ARCHITECTURE
615 Fishers Run Victor, NY 14564
585.742.2222 - www.apd.com

Copyright © 2024
APD Engineering & Architecture
615 Fishers Run
Victor, NY 14564

Drawing Alteration

It is a violation of law for any person, unless acting under the direction of licensed Architect, Professional Engineer, Landscape Architect, or Land Surveyor to alter any item on this document in any way. Any licensee who alters this document is required by law to affix his or her seal and to add the notation "Altered By" followed by his or her signature and the specific description of the alteration or revision.

DO NOT SCALE PLANS

Copying, Printing, Software and other processes required to produce these prints can stretch or shrink the actual paper or layout. Therefore, scaling of this drawing may be inaccurate. Contact APD E&A with any need for additional dimensions or clarifications.

	Issued:	Date:
A	Issued for Permit	07/08/24
B	Issued for Bid	07/29/25
C		
D		
E		

	Revisions:	Date:
1	Owner Changes	11/18/24
2	Owner Changes	07/29/25
3		
4		
5		
6		
7		
8		
9		
10		
11		
12		

PROJECT ARCHITECT/ENGINEER
Daniel Sargent

PROJECT LEAD
John Lynch

NOT FOR CONSTRUCTION

Seal Seal

ALDI Inc.
1171 North State Road 7
Royal Palm Beach, FL 33411
(561) 640-8000

ALDI Inc. Store #: 50
Coconut Crossing, FL
12850 Northlake Boulevard
Palm Beach Gardens, FL 33412
Palm Beach County
Project Name & Location:

Interior Elevations
Drawing Name:

Prototype: V7.08 LHRD
Project No. 22-0267A
Type: GROUND UP
Drawn By: JWL
Scale: As Noted
Drawing No. A-213

PLOTTED: 7/29/2025 9:44 AM

NOTES:

1. REFER TO DRAWING A-603 FOR ALL FINISH CALL-OUTS
2. VERIFY THE LOCATION OF ELECTRICAL OUTLETS WITH ELECTRICAL PLANS BEFORE INSTALLATION. IF THERE IS A CONFLICT, NOTIFY OWNER PRIOR TO ANY WORK.

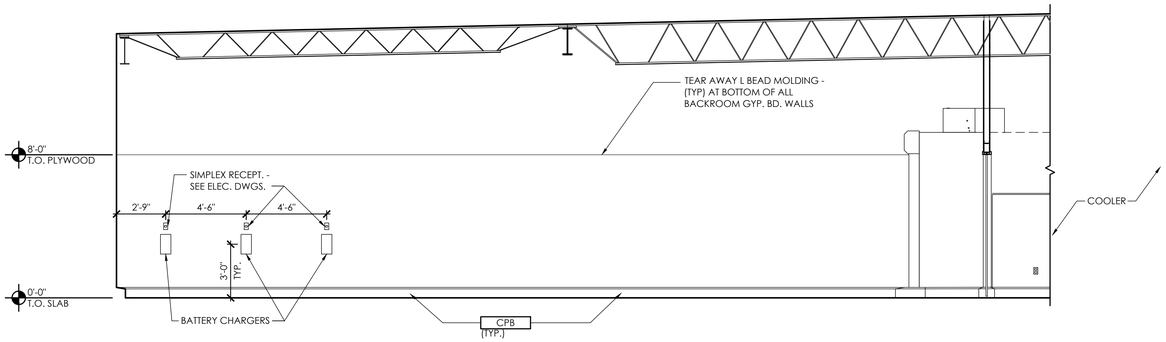

D3 Back Room #109

SCALE: 1/4" = 1'-0"

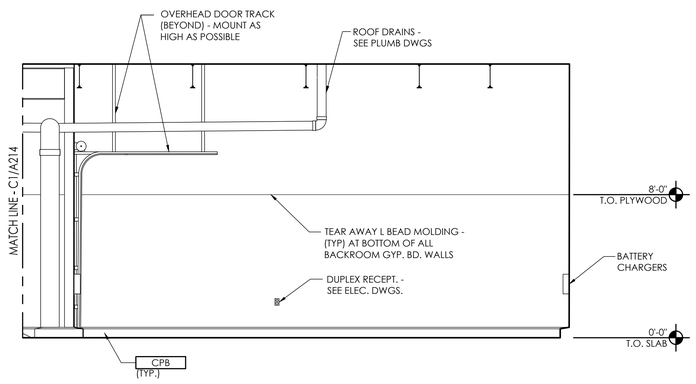

C2 Back Room #109

SCALE: 1/4" = 1'-0"

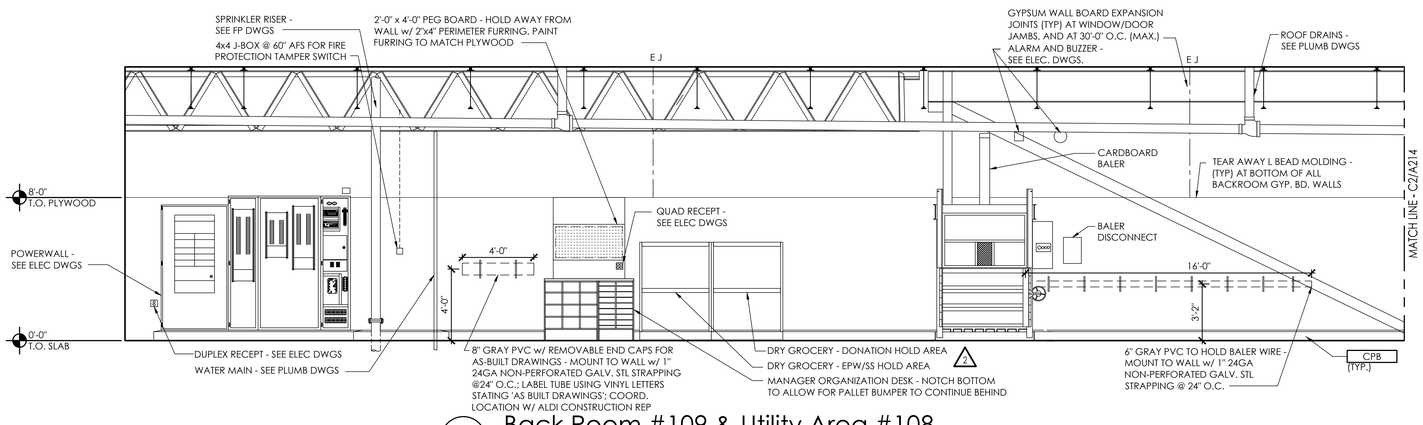

C1 Back Room #109 & Utility Area #108

SCALE: 1/4" = 1'-0"

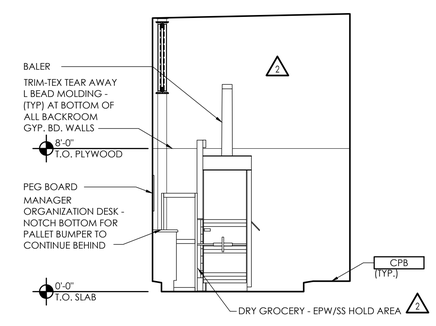

A1 Utility Area #108 & Back Room #109

SCALE: 1/4" = 1'-0"

APD ENGINEERING ARCHITECTURE
615 Fishers Run Victor, NY 14564
585.742.2222 - www.apd.com

Copyright © 2024
APD Engineering & Architecture
615 Fishers Run
Victor, NY 14564

Drawing Alteration

It is a violation of law for any person, unless acting under the direction of licensed Architect, Professional Engineer, Landscape Architect, or Land Surveyor to alter any item on this document in any way. Any licensee who alters this document is required by law to affix his or her seal and to add the notation "Altered By" followed by his or her signature and the specific description of the alteration or revision.

DO NOT SCALE PLANS

Copying, Printing, Software and other processes required to produce these prints can stretch or shrink the actual paper or layout. Therefore, scaling of this drawing may be inaccurate. Contact APD E&A with any need for additional dimensions or clarifications.

Issued:		Date:
A	Issued for Permit	07/08/24
B	Issued for Bid	07/29/25
C		
D		
E		

Revisions:		Date:
1	Owner Changes	11/18/24
2	Owner Changes	07/29/25
3		
4		
5		
6		
7		
8		
9		
10		
11		
12		

PROJECT ARCHITECT/ENGINEER
Daniel Sargent

PROJECT LEAD
John Lynch

NOT FOR CONSTRUCTION

Seal Seal

ALDI Inc.
1171 North State Road 7
Royal Palm Beach, FL 33411
(561) 640-8000

ALDI Inc. Store #: 50
Coconut Crossing, FL 1
12850 Northlake Boulevard
Palm Beach Gardens, FL 33412
Palm Beach County
Project Name & Location:

Interior Elevations
Drawing Name:

Prototype: V7.08 LHRD
Type: GROUND UP
Drawn By: JWL
Scale: As Noted

Project No. 22-0267A

Drawing No. A-214

PLOTTED: 7/29/2025 9:44 AM

D C B A

NOTE:

1. REFER TO DRAWING A-603 FOR ALL FINISH CALL-OUTS
2. REFER TO DRAWING G-004 FOR ACCESSIBILITY DIMENSIONS AND REQUIREMENTS

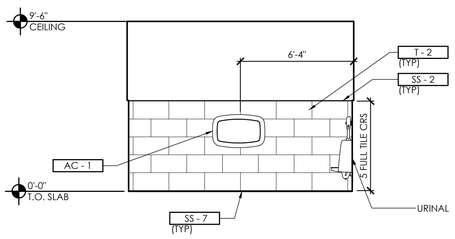

D3 Unisex 2 #105
SCALE: 1/4" = 1'-0"

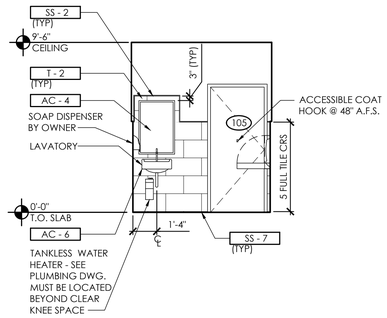

C3 Unisex 2 #105
SCALE: 1/4" = 1'-0"

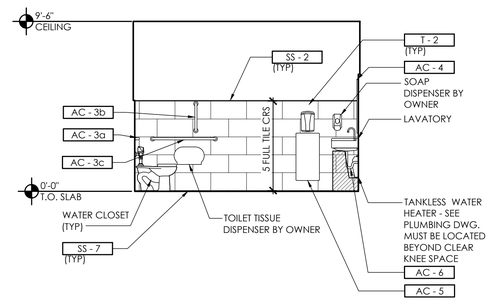

B3 Unisex 2 #105
SCALE: 1/4" = 1'-0"

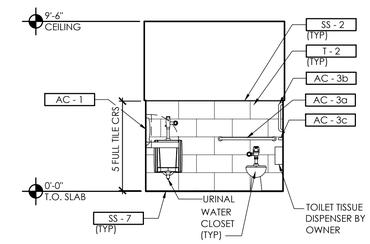

A3 Unisex 2 #105
SCALE: 1/4" = 1'-0"

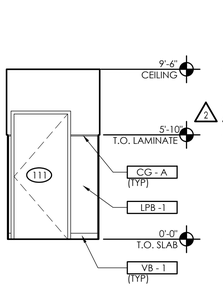

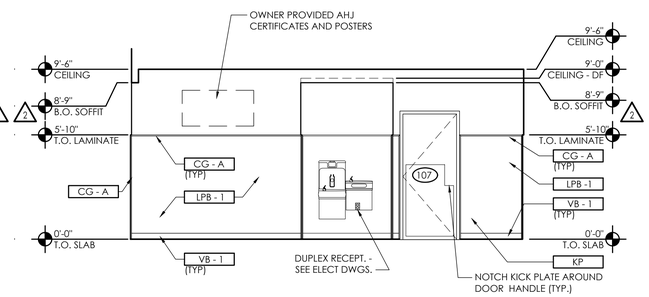

D2 Hall #104
SCALE: 1/4" = 1'-0"

C2 Hall #104
SCALE: 1/4" = 1'-0"

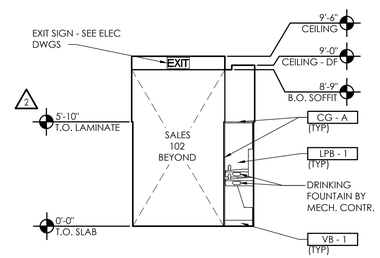

B2 Hall #104
SCALE: 1/4" = 1'-0"

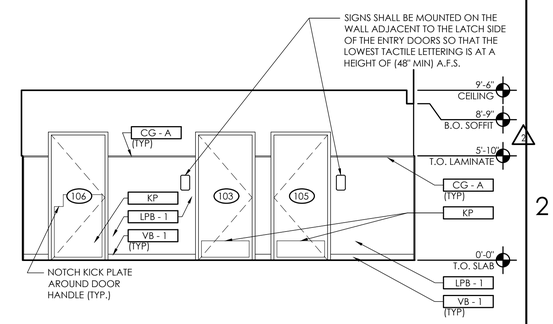

A2 Hall #104
SCALE: 1/4" = 1'-0"

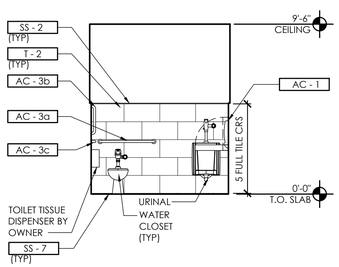

D1 Unisex 1 #103
SCALE: 1/4" = 1'-0"

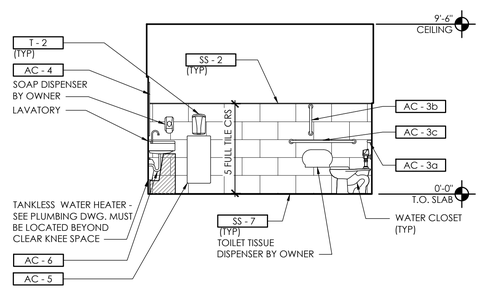

C1 Unisex 1 #103
SCALE: 1/4" = 1'-0"

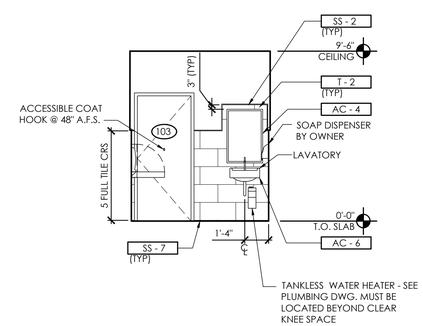

B1 Unisex 1 #103
SCALE: 1/4" = 1'-0"

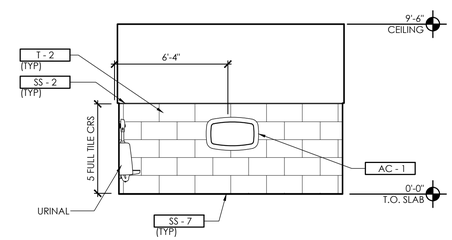

A1 Unisex 1 #103
SCALE: 1/4" = 1'-0"

D | C | B | A

APD ENGINEERING ARCHITECTURE
615 Fishers Run Victor, NY 14564
585.742.2222 - www.apd.com

Copyright © 2024
APD Engineering & Architecture
615 Fishers Run
Victor, NY 14564

Drawing Alteration

It is a violation of law for any person, unless acting under the direction of licensed Architect, Professional Engineer, Landscape Architect, or Land Surveyor to alter any item on this document in any way. Any licensee who alters this document is required by law to affix his or her seal and to add the notation "Altered By" followed by his or her signature and the specific description of the alteration or revision.

DO NOT SCALE PLANS

Copying, Printing, Software and other processes required to produce these prints can stretch or shrink the actual paper or layout. Therefore, scaling of this drawing may be inaccurate. Contact APD E&A with any need for additional dimensions or clarifications.

Issued:		Date:
A	Issued for Permit	07/08/24
B	Issued for Bid	07/29/25
C		
D		
E		

Revisions:		Date:
1	Owner Changes	11/18/24
2	Owner Changes	07/29/25
3		
4		
5		
6		
7		
8		
9		
10		
11		
12		

PROJECT ARCHITECT/ENGINEER
Daniel Sargent

PROJECT LEAD
John Lynch

NOT FOR CONSTRUCTION

Seal | Seal

ALDI Inc.
1171 North State Road 7
Royal Palm Beach, FL 33411
(561) 640-8000

ALDI Inc. Store #: 50
Coconut Crossing, FL △1
12850 Northlake Boulevard
Palm Beach Gardens, FL 33412
Palm Beach County
Project Name & Location:

Interior Elevations
Drawing Name:

Prototype: V7.08 LHRD
Type: GROUND UP
Drawn By: JWL
Scale: As Noted

Project No. 22-0267A

Drawing No. A-215

PLOTTED: 7/29/2025 9:44 AM

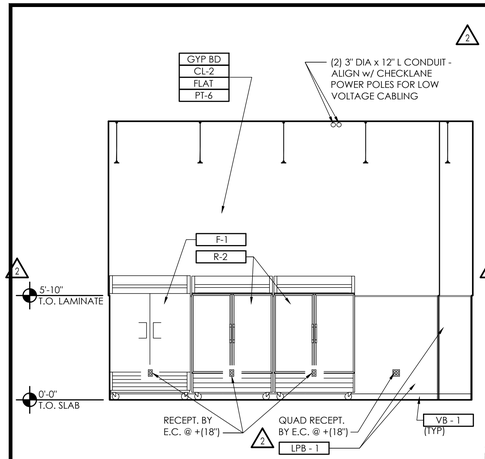

D3 eCommerce #110
SCALE: 1/4" = 1'-0"

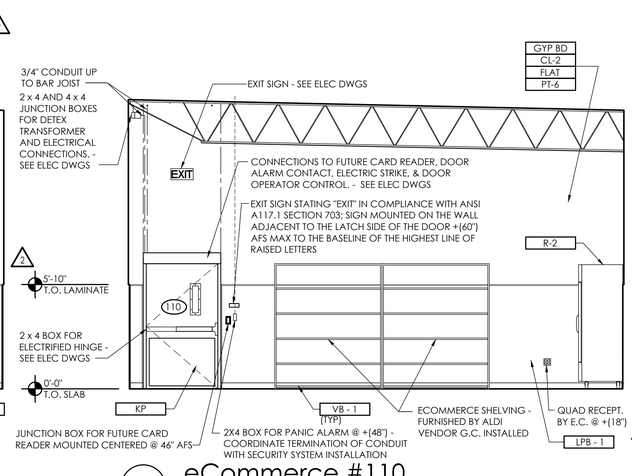

C3 eCommerce #110
SCALE: 1/4" = 1'-0"

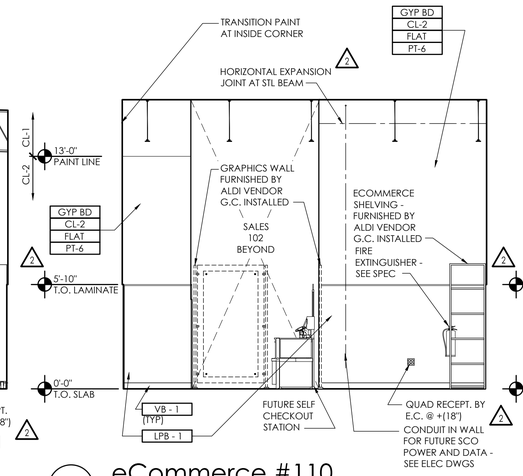

B3 eCommerce #110
SCALE: 1/4" = 1'-0"

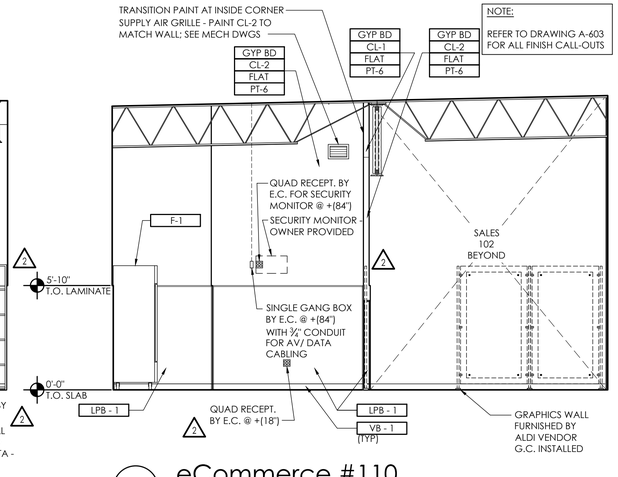

A3 eCommerce #110
SCALE: 1/4" = 1'-0"

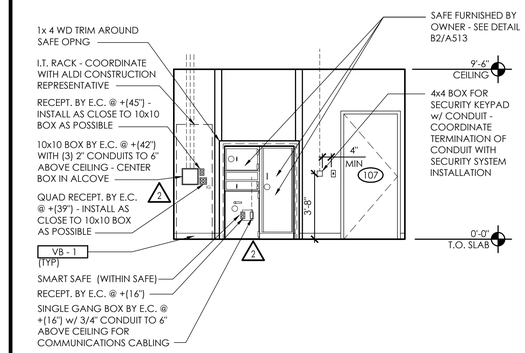

D2 Office #107
SCALE: 1/4" = 1'-0"

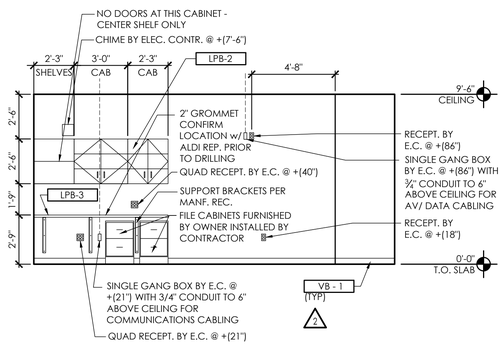

C2 Office #107
SCALE: 1/4" = 1'-0"

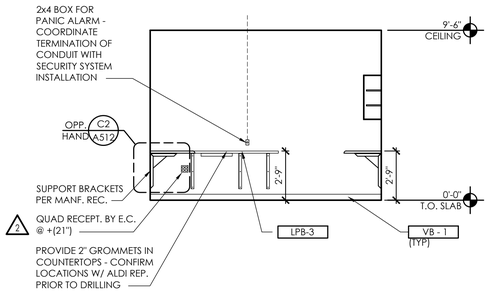

B2 Office #107
SCALE: 1/4" = 1'-0"

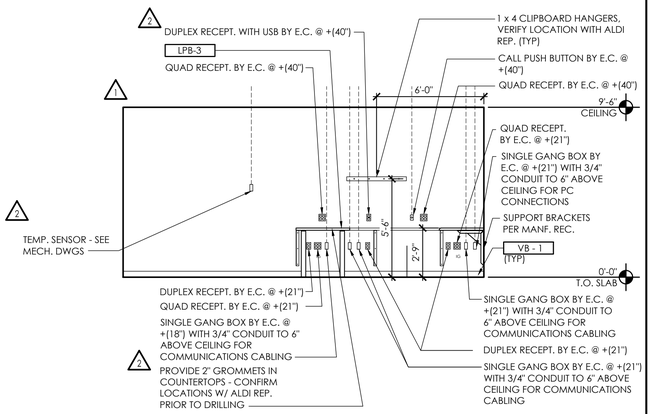

A2 Office #107
SCALE: 1/4" = 1'-0"

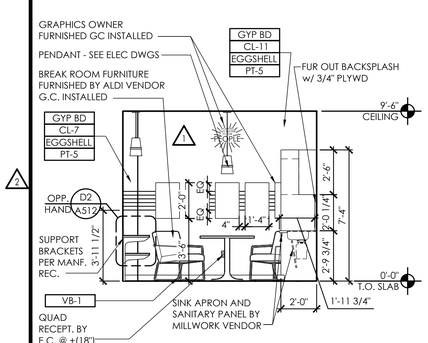

D1 Break Room #106
SCALE: 1/4" = 1'-0"

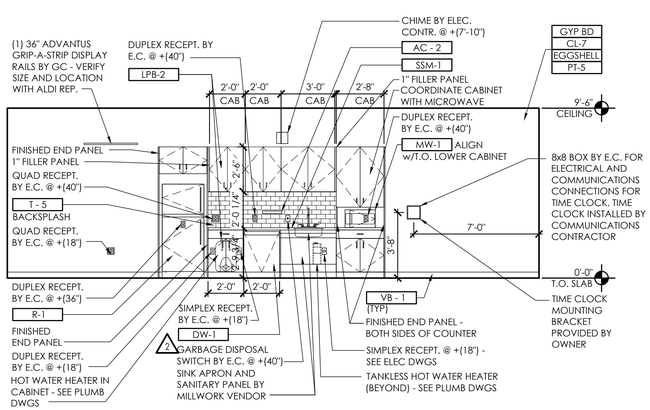

C1 Break Room #106
SCALE: 1/4" = 1'-0"

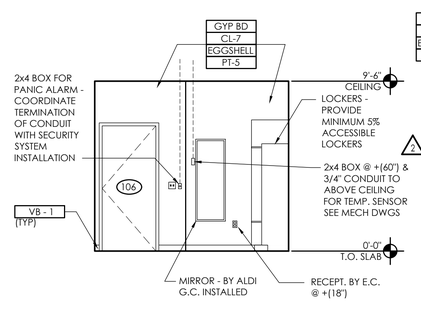

B1 Break Room #106
SCALE: 1/4" = 1'-0"

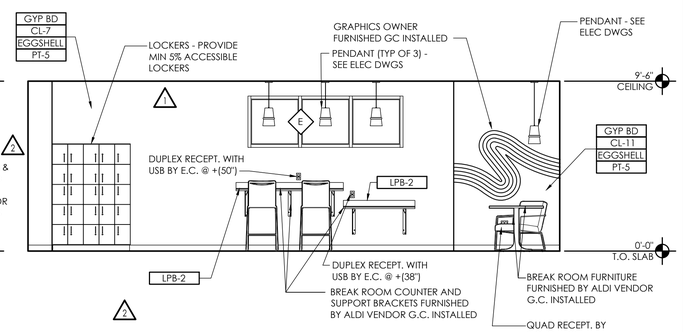

A1 Break Room #106
SCALE: 1/4" = 1'-0"

D | C | B | A

PLOTTED: 7/29/2025 9:44 AM

3

2

1

APD ENGINEERING ARCHITECTURE
615 Fishers Run Victor, NY 14564
585.742.2222 - www.apd.com

Copyright © 2024
APD Engineering & Architecture
615 Fishers Run
Victor, NY 14564

Drawing Alteration

It is a violation of law for any person, unless acting under the direction of licensed Architect, Professional Engineer, Landscape Architect, or Land Surveyor to alter any item on this document in any way. Any licensee who alters this document is required by law to affix his or her seal and to add the notation "Altered By" followed by his or her signature and the specific description of the alteration or revision.

DO NOT SCALE PLANS

Copying, Printing, Software and other processes required to produce these prints can stretch or shrink the actual paper or layout. Therefore, scaling of this drawing may be inaccurate. Contact APD E&A with any need for additional dimensions or clarifications.

Issued:		Date:
A	Issued for Permit	07/08/24
B	Issued for Bid	07/29/25
C		
D		
E		

Revisions:		Date:
1	Owner Changes	11/18/24
2	Owner Changes	07/29/25
3		
4		
5		
6		
7		
8		
9		
10		
11		
12		

PROJECT ARCHITECT/ENGINEER
Daniel Sargent

PROJECT LEAD
John Lynch

NOT FOR CONSTRUCTION

Seal | Seal

ALDI Inc.
1171 North State Road 7
Royal Palm Beach, FL 33411
(561) 640-8000

ALDI Inc. Store #: 50
Coconut Crossing, FL
12850 Northlake Boulevard
Palm Beach Gardens, FL 33412
Palm Beach County
Project Name & Location:

Interior Elevations
Drawing Name:

Prototype: V7.08 LHRD	Project No. 22-0267A
Type: GROUND UP	
Drawn By: JWL	A-216
Scale: As Noted	Drawing No.

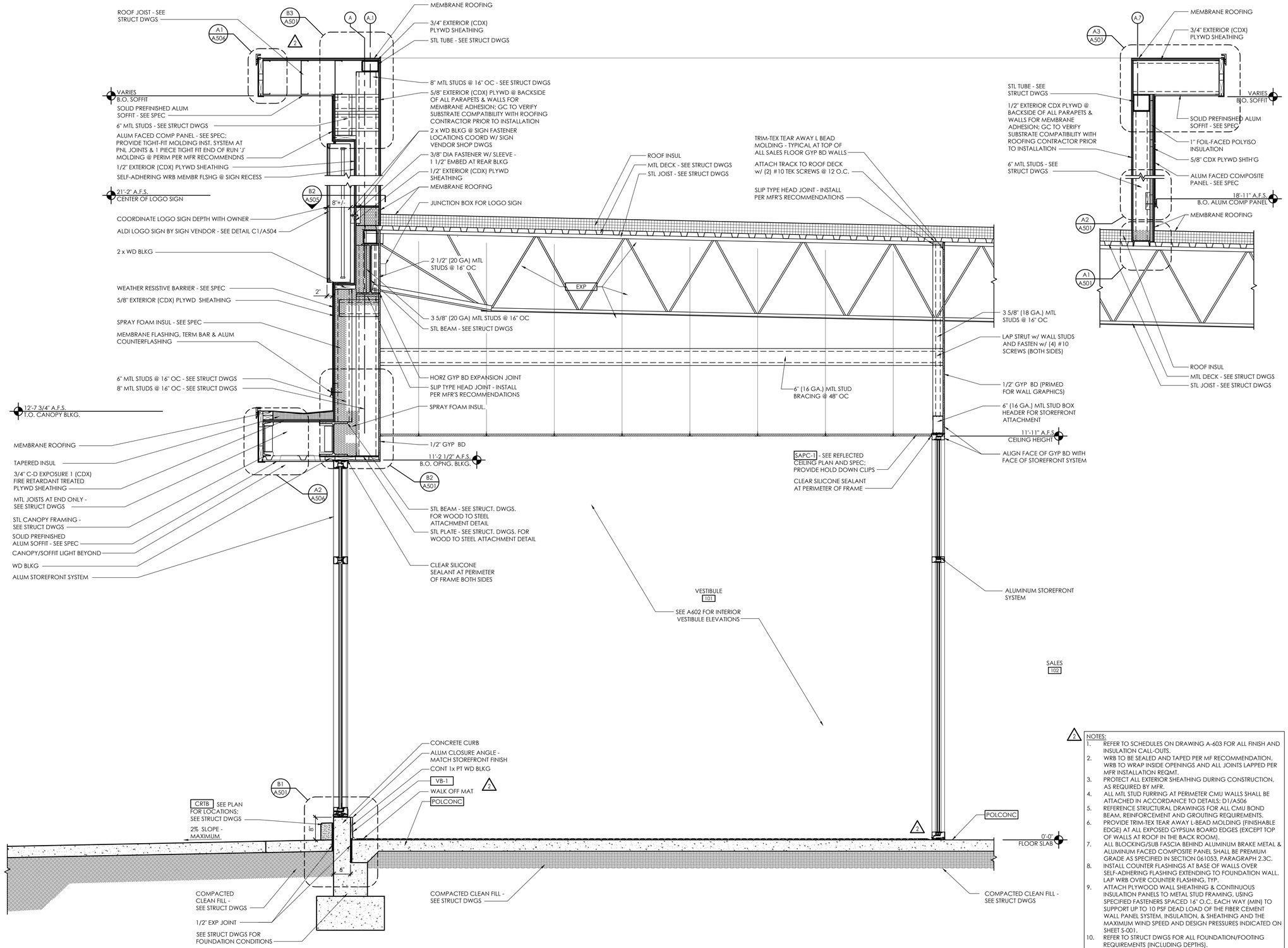

D1 Wall Section - Vestibule & Logo Sign (Long Wall)

SCALE: 3/4" = 1'-0"

NOTES:

1. REFER TO SCHEDULES ON DRAWING A-603 FOR ALL FINISH AND INSULATION CALL-OUTS.
2. WRB TO BE SEALED AND TAPED PER MF RECOMMENDATION. WRB TO WRAP INSIDE OPENINGS AND ALL JOINTS LAPPED PER MFR INSTALLATION REQMT.
3. PROTECT ALL EXTERIOR SHEATHING DURING CONSTRUCTION, AS REQUIRED BY MFR.
4. ALL MTL STUD FURRING AT PERIMETER CMU WALLS SHALL BE ATTACHED IN ACCORDANCE TO DETAILS: D1/A506
5. REFERENCE STRUCTURAL DRAWINGS FOR ALL CMU BOND BEAM, REINFORCEMENT AND GROUTING REQUIREMENTS.
6. PROVIDE TRIM-TEX TEAR AWAY L-BEAD MOLDING (FINISHABLE EDGE) AT ALL EXPOSED GYPSUM BOARD EDGES (EXCEPT TOP OF WALLS AT ROOF IN THE BACK ROOM).
7. ALL BLOCKING/SUB FASCIA BEHIND ALUMINUM BRAKE METAL & ALUMINUM FACED COMPOSITE PANEL SHALL BE PREMIUM GRADE AS SPECIFIED IN SECTION 061053, PARAGRAPH 2.3C.
8. INSTALL COUNTER FLASHINGS AT BASE OF WALLS OVER SELF-ADHERING FLASHING EXTENDING TO FOUNDATION WALL. LAP WRB OVER COUNTER FLASHING, TYP.
9. ATTACH PLYWOOD WALL SHEATHING & CONTINUOUS INSULATION PANELS TO METAL STUD FRAMING, USING SPECIFIED FASTENERS SPACED 16" O.C. EACH WAY (MIN) TO SUPPORT UP TO 10 PSF DEAD LOAD OF THE FIBER CEMENT WALL PANEL SYSTEM, INSULATION, & SHEATHING AND THE MAXIMUM WIND SPEED AND DESIGN PRESSURES INDICATED ON SHEET S-001.
10. REFER TO STRUCT DWGS FOR ALL FOUNDATION/FOOTING REQUIREMENTS (INCLUDING DEPTHS).
11. ALL ALUMINUM STOREFRONT/CURTAIN WALL FRAMING SHALL BE INSTALLED WITH THE EXTERIOR FRAME FACE ALIGNED WITH THE EXTERIOR BUILDING WALL LINE UNLESS NOTED OTHERWISE. NO GRAY BLOCK OR EXTERIOR SHEATHING SHALL BE EXPOSED AT JAMBS, HEADS, AND SILLS
12. PROVIDE CONTINUOUS SEALANT ALONG THE CART BUMPER/SIDEWALK JOINT.
13. PROVIDE BOND BREAKER BETWEEN DISSIMILAR METALS.
14. REFER TO RESPONSIBILITY SCHEDULES FOR ROOF SCOPE.

APD ENGINEERING ARCHITECTURE
615 Fishers Run Victor, NY 14564
585.742.2222 - www.apd.com

Copyright © 2024
APD Engineering & Architecture
615 Fishers Run
Victor, NY 14564

Drawing Alteration

It is a violation of law for any person, unless acting under the direction of licensed Architect, Professional Engineer, Landscape Architect, or Land Surveyor to alter any item on this document in any way. Any licensee who alters this document is required by law to affix his or her seal and to add the notation "Altered By" followed by his or her signature and the specific description of the alteration or revision.

DO NOT SCALE PLANS

Copying, Printing, Software and other processes required to produce these prints can stretch or shrink the actual paper or layout. Therefore, scaling of this drawing may be inaccurate. Contact APD E&A with any need for additional dimensions or clarifications.

Issued:		Date:
A	Issued for Permit	07/08/24
B	Issued for Bid	07/29/25
C		
D		
E		

Revisions:		Date:
1	Owner Changes	11/18/24
2	Owner Changes	07/29/25
3		
4		
5		
6		
7		
8		
9		
10		
11		
12		

PROJECT ARCHITECT/ENGINEER
Daniel Sargent

PROJECT LEAD
John Lynch

NOT FOR CONSTRUCTION

Seal | Seal

ALDI Inc.
1171 North State Road 7
Royal Palm Beach, FL 33411
(561) 640-8000

ALDI Inc. Store #: 50
Coconut Crossing, FL 1
12850 Northlake Boulevard
Palm Beach Gardens, FL 33412
Palm Beach County

Project Name & Location:

Wall Sections

Drawing Name:

Prototype: V7.08 LHRD	Project No. 22-0267A
Type: GROUND UP	
Drawn By: JAH	A-301
Scale: As Noted	Drawing No.

PLOTTED: 7/29/2025 9:45 AM

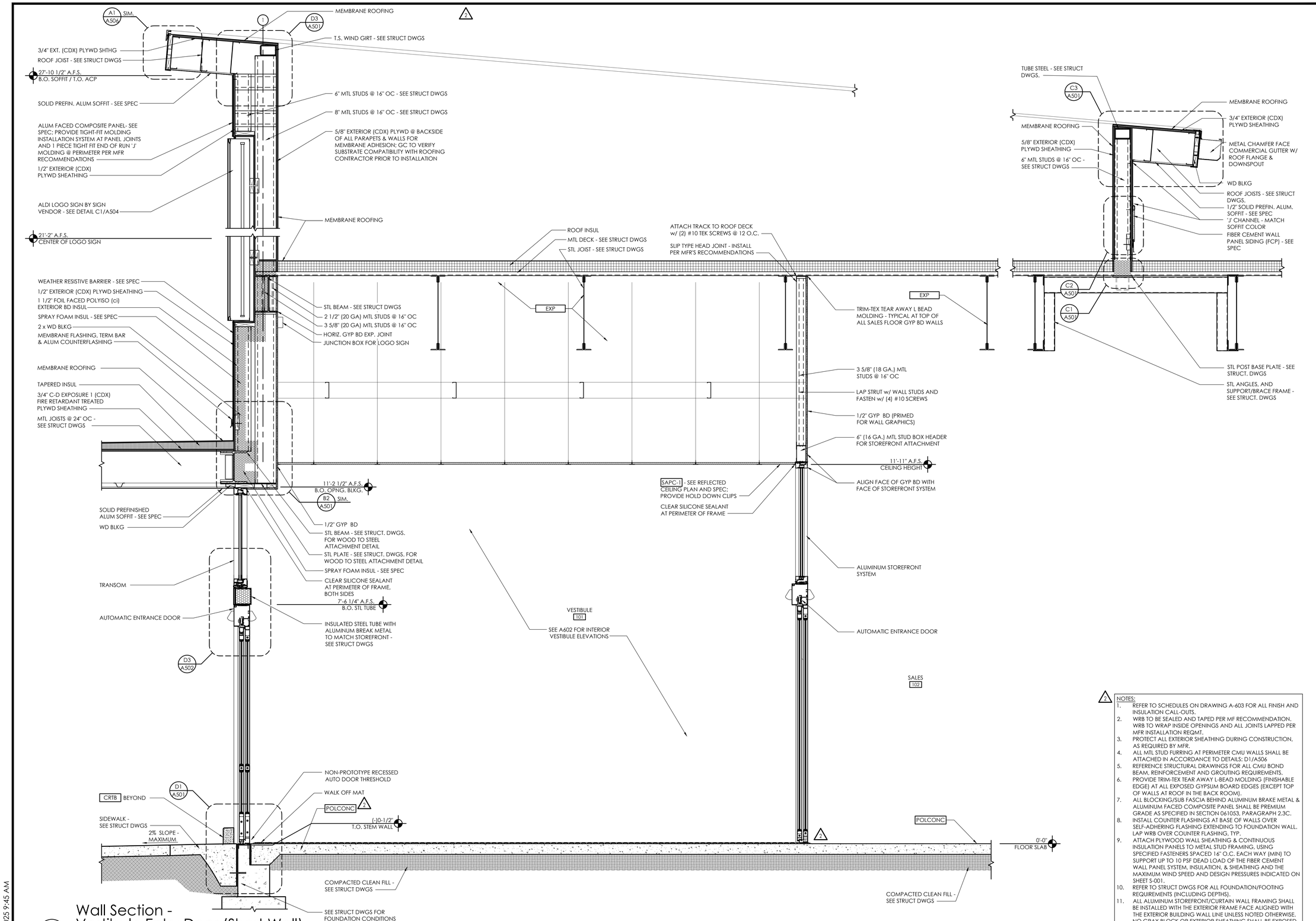

D1 Wall Section - Vestibule Entry Door (Short Wall)

SCALE: 3/4" = 1'-0"

2

NOTES:

1. REFER TO SCHEDULES ON DRAWING A-603 FOR ALL FINISH AND INSULATION CALL-OUTS.
2. WRB TO BE SEALED AND TAPED PER MF RECOMMENDATION. WRB TO WRAP INSIDE OPENINGS AND ALL JOINTS LAPPED PER MFR INSTALLATION REQMT.
3. PROTECT ALL EXTERIOR SHEATHING DURING CONSTRUCTION, AS REQUIRED BY MFR.
4. ALL MTL STUD FURRING AT PERIMETER CMU WALLS SHALL BE ATTACHED IN ACCORDANCE TO DETAILS: D1/A506
5. REFERENCE STRUCTURAL DRAWINGS FOR ALL CMU BOND BEAM, REINFORCEMENT AND GROUTING REQUIREMENTS.
6. PROVIDE TRIM-TEX TEAR AWAY L-BEAD MOLDING (FINISHABLE EDGE) AT ALL EXPOSED GYPSUM BOARD EDGES (EXCEPT TOP OF WALLS AT ROOF IN THE BACK ROOM).
7. ALL BLOCKING/SUB FASCIA BEHIND ALUMINUM BRAKE METAL & ALUMINUM FACED COMPOSITE PANEL SHALL BE PREMIUM GRADE AS SPECIFIED IN SECTION 061053, PARAGRAPH 2.3C.
8. INSTALL COUNTER FLASHINGS AT BASE OF WALLS OVER SELF-ADHERING FLASHING EXTENDING TO FOUNDATION WALL. LAP WRB OVER COUNTER FLASHING, TYP.
9. ATTACH PLYWOOD WALL SHEATHING & CONTINUOUS INSULATION PANELS TO METAL STUD FRAMING, USING SPECIFIED FASTENERS SPACED 16" O.C. EACH WAY (MIN) TO SUPPORT UP TO 10 PSF DEAD LOAD OF THE FIBER CEMENT WALL PANEL SYSTEM, INSULATION, & SHEATHING AND THE MAXIMUM WIND SPEED AND DESIGN PRESSURES INDICATED ON SHEET S-001.
10. REFER TO STRUCT DWGS FOR ALL FOUNDATION/FOOTING REQUIREMENTS (INCLUDING DEPTHS).
11. ALL ALUMINUM STOREFRONT/CURTAIN WALL FRAMING SHALL BE INSTALLED WITH THE EXTERIOR FRAME FACE ALIGNED WITH THE EXTERIOR BUILDING WALL LINE UNLESS NOTED OTHERWISE. NO GRAY BLOCK OR EXTERIOR SHEATHING SHALL BE EXPOSED AT JAMBS, HEADS, AND SILLS
12. PROVIDE CONTINUOUS SEALANT ALONG THE CART BUMPER/SIDEWALK JOINT.
13. PROVIDE BOND BREAKER BETWEEN DISSIMILAR METALS.
14. REFER TO RESPONSIBILITY SCHEDULES FOR ROOF SCOPE.

PLOTTED: 7/29/2025 9:45 AM

APD ENGINEERING ARCHITECTURE
615 Fishers Run Victor, NY 14564
585.742.2222 - www.apd.com

Copyright © 2024
APD Engineering & Architecture
615 Fishers Run
Victor, NY 14564

Drawing Alteration

It is a violation of law for any person, unless acting under the direction of licensed Architect, Professional Engineer, Landscape Architect, or Land Surveyor to alter any item on this document in any way. Any licensee who alters this document is required by law to affix his or her seal and to add the notation "Altered By" followed by his or her signature and the specific description of the alteration or revision.

DO NOT SCALE PLANS

Copying, Printing, Software and other processes required to produce these prints can stretch or shrink the actual paper or layout. Therefore, scaling of this drawing may be inaccurate. Contact APD E&A with any need for additional dimensions or clarifications.

Issued:		Date:
A	Issued for Permit	07/08/24
B	Issued for Bid	07/29/25
C		
D		
E		

Revisions:		Date:
1	Owner Changes	11/18/24
2	Owner Changes	07/29/25
3		
4		
5		
6		
7		
8		
9		
10		
11		
12		

PROJECT ARCHITECT/ENGINEER
Daniel Sargent

PROJECT LEAD
John Lynch

NOT FOR CONSTRUCTION

Seal Seal

ALDI Inc.
1171 North State Road 7
Royal Palm Beach, FL 33411
(561) 640-8000

ALDI Inc. Store #: 50
Coconut Crossing, FL 1
12850 Northlake Boulevard
Palm Beach Gardens, FL 33412
Palm Beach County

Project Name & Location:

Wall Sections

Drawing Name:

Prototype: V7.08 LHRD	Project No. 22-0267A
Type: GROUND UP	
Drawn By: JAH	A-302
Scale: As Noted	Drawing No.

NOTES:
1. REFER TO SCHEDULES ON DRAWING A-603 FOR ALL FINISH AND INSULATION CALL-OUTS.
2. WRB TO BE SEALED AND TAPED PER MF RECOMMENDATION. WRB TO WRAP INSIDE OPENINGS AND ALL JOINTS LAPPED PER MFR INSTALLATION REQMT.
3. PROTECT ALL EXTERIOR SHEATHING DURING CONSTRUCTION, AS REQUIRED BY MFR.
4. ALL MTL STUD FURRING AT PERIMETER CMU WALLS SHALL BE ATTACHED IN ACCORDANCE TO DETAILS: D1/A506
5. REFERENCE STRUCTURAL DRAWINGS FOR ALL CMU BOND BEAM, REINFORCEMENT AND GROUTING REQUIREMENTS.
6. PROVIDE TRIM-TEX TEAR AWAY L-BEAD MOLDING (FINISHABLE EDGE) AT ALL EXPOSED GYPSUM BOARD EDGES (EXCEPT TOP OF WALLS AT ROOF IN THE BACK ROOM).
7. ALL BLOCKING/SUB FASCIA BEHIND ALUMINUM BRAKE METAL & ALUMINUM FACED COMPOSITE PANEL SHALL BE PREMIUM GRADE AS SPECIFIED IN SECTION 061053, PARAGRAPH 2.3C.
8. INSTALL COUNTER FLASHINGS AT BASE OF WALLS OVER SELF-ADHERING FLASHING EXTENDING TO FOUNDATION WALL. LAP WRB OVER COUNTER FLASHING, TYP.
9. ATTACH PLYWOOD WALL SHEATHING & CONTINUOUS INSULATION PANELS TO METAL STUD FRAMING, USING SPECIFIED FASTENERS SPACED 16" O.C. EACH WAY (MIN) TO SUPPORT UP TO 10 PSF DEAD LOAD OF THE FIBER CEMENT WALL PANEL SYSTEM, INSULATION, & SHEATHING AND THE MAXIMUM WIND SPEED AND DESIGN PRESSURES INDICATED ON SHEET S-001.
10. REFER TO STRUCT DWGS FOR ALL FOUNDATION/FOOTING REQUIREMENTS (INCLUDING DEPTHS).
11. ALL ALUMINUM STOREFRONT/CURTAIN WALL FRAMING SHALL BE INSTALLED WITH THE EXTERIOR FRAME FACE ALIGNED WITH THE EXTERIOR BUILDING WALL LINE UNLESS NOTED OTHERWISE. NO GRAY BLOCK OR EXTERIOR SHEATHING SHALL BE EXPOSED AT JAMBS, HEADS, AND SILLS
12. PROVIDE CONTINUOUS SEALANT ALONG THE CART BUMPER/SIDEWALK JOINT.
13. PROVIDE BOND BREAKER BETWEEN DISSIMILAR METALS.
14. REFER TO RESPONSIBILITY SCHEDULES FOR ROOF SCOPE.

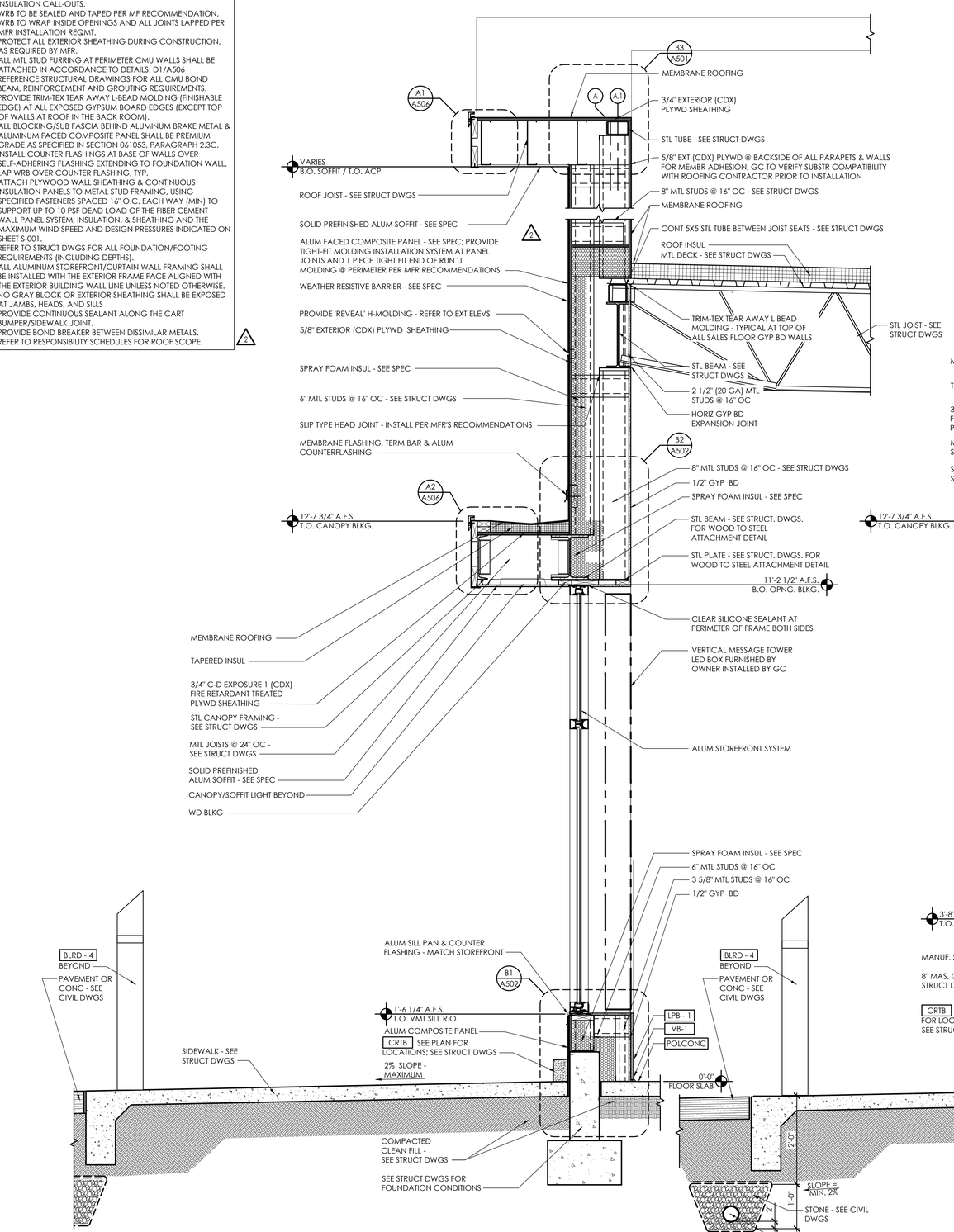

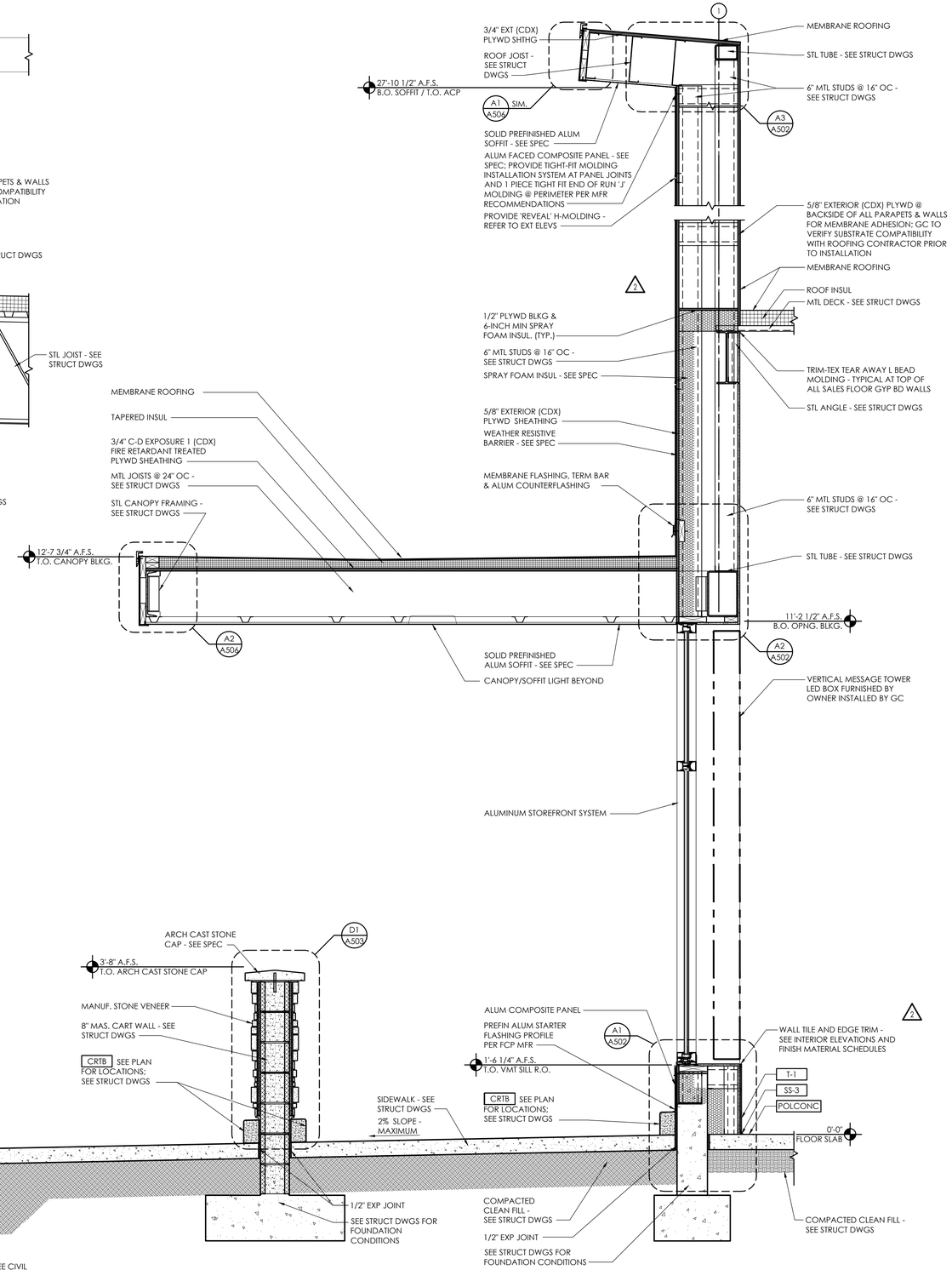

D1 Wall Section - LED Box (Long Wall)
SCALE: 3/4" = 1'-0"

B1 Wall Section - LED Box (Short Wall)
SCALE: 3/4" = 1'-0"

PLOTTED: 7/29/2025 9:45 AM

APD ENGINEERING ARCHITECTURE
615 Fishers Run Victor, NY 14564
585.742.2222 - www.apd.com

Copyright © 2024
APD Engineering & Architecture
615 Fishers Run
Victor, NY 14564

Drawing Alteration

It is a violation of law for any person, unless acting under the direction of licensed Architect, Professional Engineer, Landscape Architect, or Land Surveyor to alter any item on this document in any way. Any licensee who alters this document is required by law to affix his or her seal and to add the notation "Altered By" followed by his or her signature and the specific description of the alteration or revision.

DO NOT SCALE PLANS

Copying, Printing, Software and other processes required to produce these prints can stretch or shrink the actual paper or layout. Therefore, scaling of this drawing may be inaccurate. Contact APD E&A with any need for additional dimensions or clarifications.

Issued:		Date:
A	Issued for Permit	07/08/24
B	Issued for Bid	07/29/25
C		
D		
E		

Revisions:		Date:
1	Owner Changes	11/18/24
2	Owner Changes	07/29/25
3		
4		
5		
6		
7		
8		
9		
10		
11		
12		

PROJECT ARCHITECT/ENGINEER
Daniel Sargent

PROJECT LEAD
John Lynch

NOT FOR CONSTRUCTION

Seal | Seal

ALDI Inc.
1171 North State Road 7
Royal Palm Beach, FL 33411
(561) 640-8000

ALDI Inc. Store #: 50
Coconut Crossing, FL △1
12850 Northlake Boulevard
Palm Beach Gardens, FL 33412
Palm Beach County
Project Name & Location:

Wall Sections
Drawing Name:

Prototype: V7.08 LHRD	Project No. 22-0267A
Type: GROUND UP	
Drawn By: JAH	A-303
Scale: As Noted	Drawing No.

NOTES:
1. REFER TO SCHEDULES ON DRAWING A-603 FOR ALL FINISH AND INSULATION CALL-OUTS.
2. WRB TO BE SEALED AND TAPED PER MF RECOMMENDATION. WRB TO WRAP INSIDE OPENINGS AND ALL JOINTS LAPPED PER MFR INSTALLATION REQMT.
3. PROTECT ALL EXTERIOR SHEATHING DURING CONSTRUCTION, AS REQUIRED BY MFR.
4. ALL MTL STUD FURRING AT PERIMETER CMU WALLS SHALL BE ATTACHED IN ACCORDANCE TO DETAILS: D1/A506
5. REFERENCE STRUCTURAL DRAWINGS FOR ALL CMU BOND BEAM, REINFORCEMENT AND GROUTING REQUIREMENTS.
6. PROVIDE TRIM-TEX TEAR AWAY L-BEAD MOLDING (FINISHABLE EDGE) AT ALL EXPOSED GYPSUM BOARD EDGES (EXCEPT TOP OF WALLS AT ROOF IN THE BACK ROOM).
7. ALL BLOCKING/SUB FASCIA BEHIND ALUMINUM BRAKE METAL & ALUMINUM FACED COMPOSITE PANEL SHALL BE PREMIUM GRADE AS SPECIFIED IN SECTION 061053, PARAGRAPH 2.3C.
8. INSTALL COUNTER FLASHINGS AT BASE OF WALLS OVER SELF-ADHERING FLASHING EXTENDING TO FOUNDATION WALL. LAP WRB OVER COUNTER FLASHING, TYP.
9. ATTACH PLYWOOD WALL SHEATHING & CONTINUOUS INSULATION PANELS TO METAL STUD FRAMING, USING SPECIFIED FASTENERS SPACED 16" O.C. EACH WAY (MIN) TO SUPPORT UP TO 10 PSF DEAD LOAD OF THE FIBER CEMENT WALL PANEL SYSTEM, INSULATION, & SHEATHING AND THE MAXIMUM WIND SPEED AND DESIGN PRESSURES INDICATED ON SHEET S-001.
10. REFER TO STRUCT DWGS FOR ALL FOUNDATION/FOOTING REQUIREMENTS (INCLUDING DEPTHS).
11. ALL ALUMINUM STOREFRONT/CURTAIN WALL FRAMING SHALL BE INSTALLED WITH THE EXTERIOR FRAME FACE ALIGNED WITH THE EXTERIOR BUILDING WALL LINE UNLESS NOTED OTHERWISE. NO GRAY BLOCK OR EXTERIOR SHEATHING SHALL BE EXPOSED AT JAMBS, HEADS, AND SILLS
12. PROVIDE CONTINUOUS SEALANT ALONG THE CART BUMPER/SIDEWALK JOINT.
13. PROVIDE BOND BREAKER BETWEEN DISSIMILAR METALS.
14. REFER TO RESPONSIBILITY SCHEDULES FOR ROOF SCOPE. 2

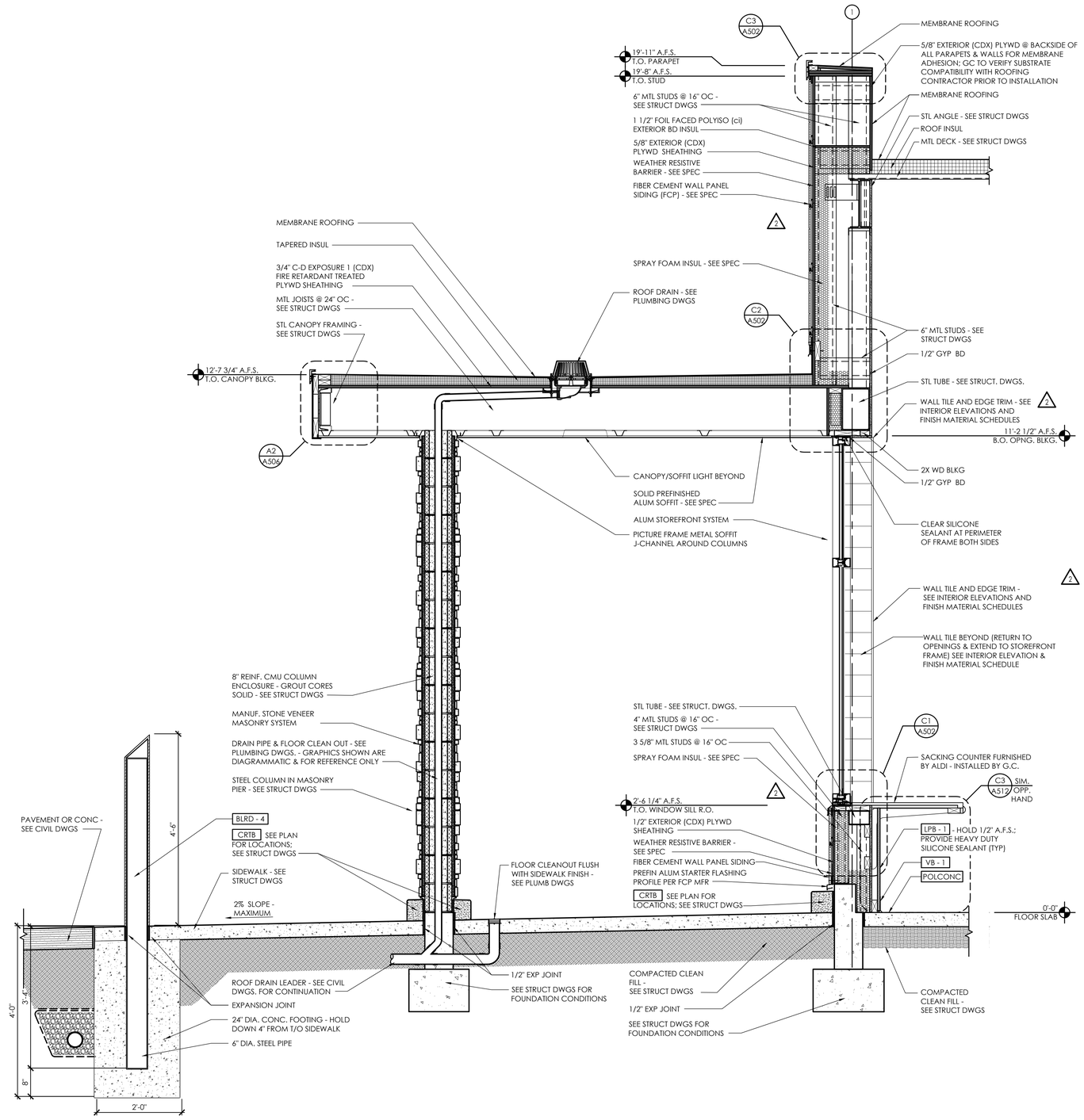

B1 Wall Section - Sacking Counter

SCALE: 3/4" = 1'-0"

PLOTTED: 7/29/2025 9:45 AM

APD ENGINEERING ARCHITECTURE
615 Fishers Run Victor, NY 14564
585.742.2222 - www.apd.com

Copyright © 2024
APD Engineering & Architecture
615 Fishers Run
Victor, NY 14564

Drawing Alteration

It is a violation of law for any person, unless acting under the direction of licensed Architect, Professional Engineer, Landscape Architect, or Land Surveyor to alter any item on this document in any way. Any licensee who alters this document is required by law to affix his or her seal and to add the notation "Altered By" followed by his or her signature and the specific description of the alteration or revision.

DO NOT SCALE PLANS

Copying, Printing, Software and other processes required to produce these prints can stretch or shrink the actual paper or layout. Therefore, scaling of this drawing may be inaccurate. Contact APD E&A with any need for additional dimensions or clarifications.

Issued:		Date:
A	Issued for Permit	07/08/24
B	Issued for Bid	07/29/25
C		
D		
E		

Revisions:		Date:
1	Owner Changes	11/18/24
2	Owner Changes	07/29/25
3		
4		
5		
6		
7		
8		
9		
10		
11		
12		

PROJECT ARCHITECT/ENGINEER
Daniel Sargent

PROJECT LEAD
John Lynch

NOT FOR CONSTRUCTION

Seal Seal

ALDI Inc.
1171 North State Road 7
Royal Palm Beach, FL 33411
(561) 640-8000

ALDI Inc. Store #: 50
Coconut Crossing, FL 1
12850 Northlake Boulevard
Palm Beach Gardens, FL 33412
Palm Beach County
Project Name & Location:

Wall Sections
Drawing Name:

Prototype: V7.08 LHRD
Type: GROUND UP
Drawn By: JAH
Scale: As Noted

Project No. 22-0267A

A-304
Drawing No.

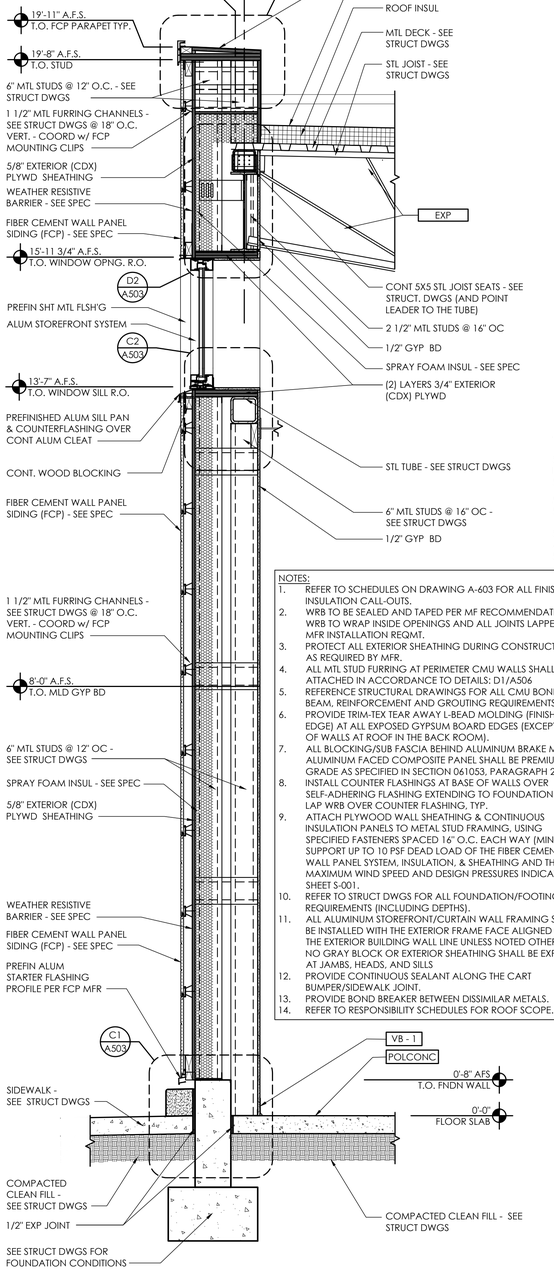

NOTES:

1. REFER TO SCHEDULES ON DRAWING A-603 FOR ALL FINISH AND INSULATION CALL-OUTS.
2. WRB TO BE SEALED AND TAPED PER MF RECOMMENDATION. WRB TO WRAP INSIDE OPENINGS AND ALL JOINTS LAPPED PER MFR INSTALLATION REQMT.
3. PROTECT ALL EXTERIOR SHEATHING DURING CONSTRUCTION, AS REQUIRED BY MFR.
4. ALL MTL STUD FURRING AT PERIMETER CMU WALLS SHALL BE ATTACHED IN ACCORDANCE TO DETAILS: D1/A506
5. REFERENCE STRUCTURAL DRAWINGS FOR ALL CMU BOND BEAM, REINFORCEMENT AND GROUTING REQUIREMENTS.
6. PROVIDE TRIM-TEX TEAR AWAY L-BEAD MOLDING (FINISHABLE EDGE) AT ALL EXPOSED GYPSUM BOARD EDGES (EXCEPT TOP OF WALLS AT ROOF IN THE BACK ROOM).
7. ALL BLOCKING/SUB FASCIA BEHIND ALUMINUM BRAKE METAL & ALUMINUM FACED COMPOSITE PANEL SHALL BE PREMIUM GRADE AS SPECIFIED IN SECTION 061053, PARAGRAPH 2.3C.
8. INSTALL COUNTER FLASHINGS AT BASE OF WALLS OVER SELF-ADHERING FLASHING EXTENDING TO FOUNDATION WALL. LAP WRB OVER COUNTER FLASHING, TYP.
9. ATTACH PLYWOOD WALL SHEATHING & CONTINUOUS INSULATION PANELS TO METAL STUD FRAMING, USING SPECIFIED FASTENERS SPACED 16" O.C. EACH WAY (MIN) TO SUPPORT UP TO 10 PSF DEAD LOAD OF THE FIBER CEMENT WALL PANEL SYSTEM, INSULATION, & SHEATHING AND THE MAXIMUM WIND SPEED AND DESIGN PRESSURES INDICATED ON SHEET S-001.
10. REFER TO STRUCT DWGS FOR ALL FOUNDATION/FOOTING REQUIREMENTS (INCLUDING DEPTHS).
11. ALL ALUMINUM STOREFRONT/CURTAIN WALL FRAMING SHALL BE INSTALLED WITH THE EXTERIOR FRAME FACE ALIGNED WITH THE EXTERIOR BUILDING WALL LINE UNLESS NOTED OTHERWISE. NO GRAY BLOCK OR EXTERIOR SHEATHING SHALL BE EXPOSED AT JAMBS, HEADS, AND SILLS
12. PROVIDE CONTINUOUS SEALANT ALONG THE CART BUMPER/SIDEWALK JOINT.
13. PROVIDE BOND BREAKER BETWEEN DISSIMILAR METALS.
14. REFER TO RESPONSIBILITY SCHEDULES FOR ROOF SCOPE.

D1 Wall Section - Sales (Long Wall)

SCALE: 3/4" = 1'-0"

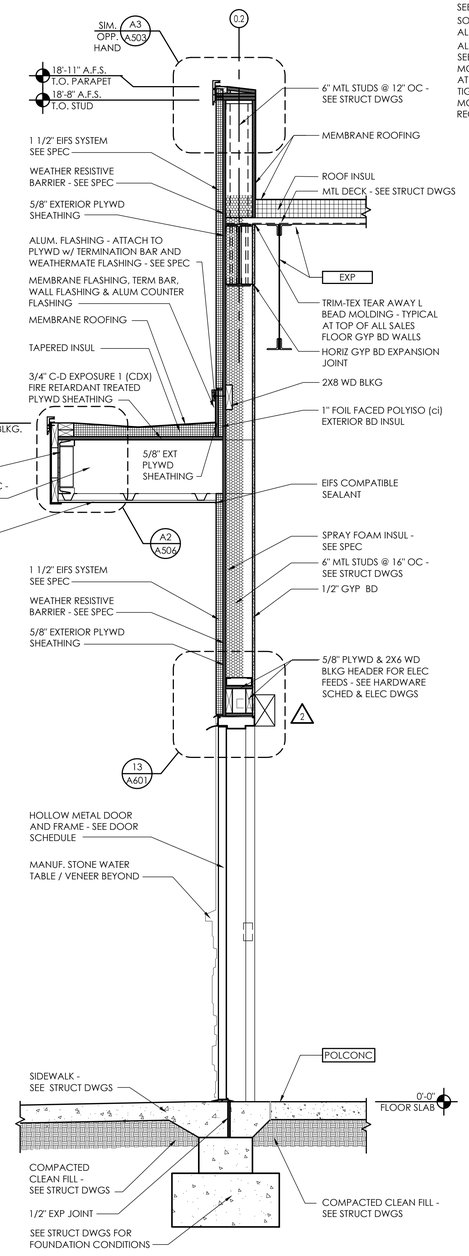

C1 Wall Section - Sales at eCommerce Door

SCALE: 3/4" = 1'-0"

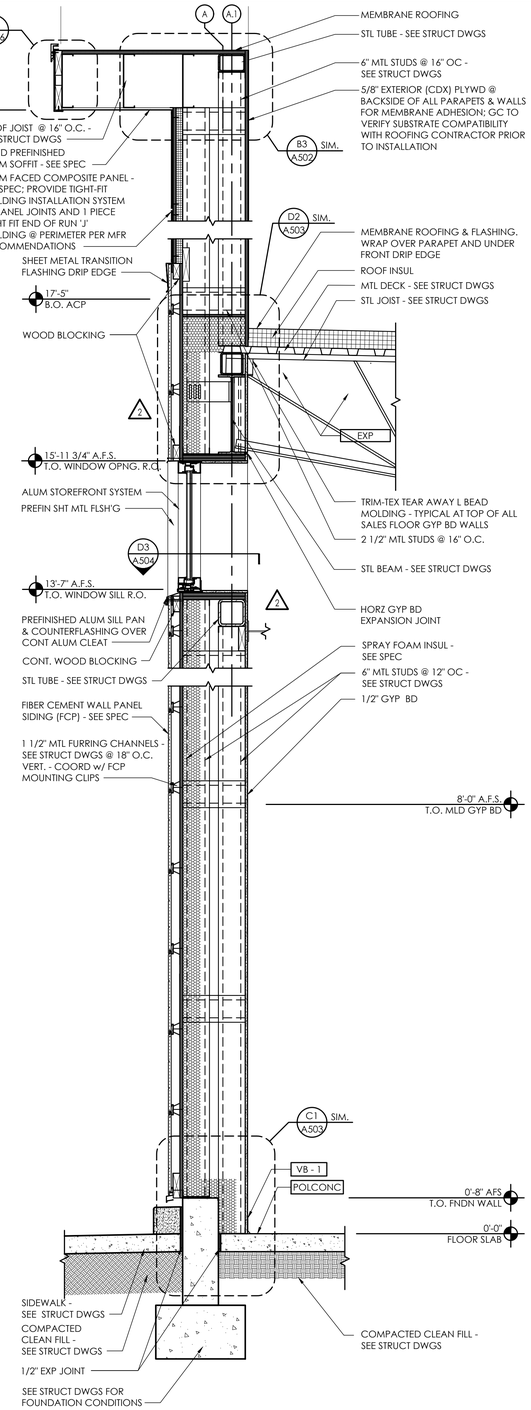

B1 Wall Section - High Joist Bearing

SCALE: 3/4" = 1'-0"

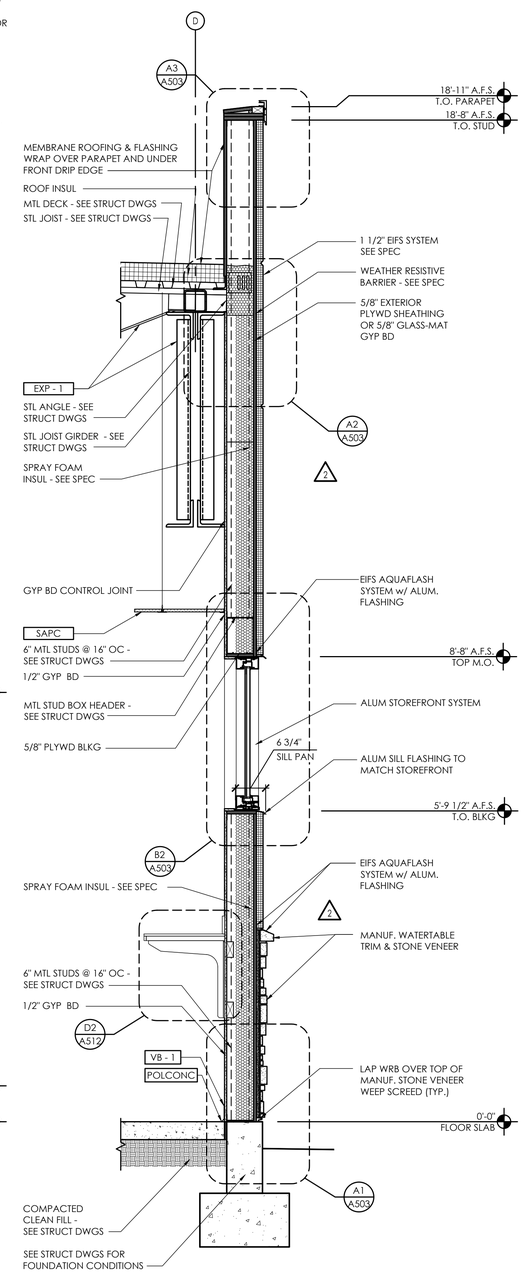

A1 Wall Section - Low Joist Bearing

SCALE: 3/4" = 1'-0"

PLOTTED: 7/29/2026 9:45 AM

APD ENGINEERING ARCHITECTURE
615 Fishers Run Victor, NY 14564
585.742.2222 - www.apd.com

Copyright © 2024
APD Engineering & Architecture
615 Fishers Run
Victor, NY 14564

Drawing Alteration

It is a violation of law for any person, unless acting under the direction of licensed Architect, Professional Engineer, Landscape Architect, or Land Surveyor to alter any item on this document in any way. Any licensee who alters this document is required by law to affix his or her seal and to add the notation "Altered By" followed by his or her signature and the specific description of the alteration or revision.

DO NOT SCALE PLANS

Copying, Printing, Software and other processes required to produce these prints can stretch or shrink the actual paper or layout. Therefore, scaling of this drawing may be inaccurate. Contact APD E&A with any need for additional dimensions or clarifications.

Issued:		Date:
A	Issued for Permit	07/08/24
B	Issued for Bid	07/29/25
C		
D		
E		

Revisions:		Date:
1	Owner Changes	11/18/24
2	Owner Changes	07/29/25
3		
4		
5		
6		
7		
8		
9		
10		
11		
12		

PROJECT ARCHITECT/ENGINEER
Daniel Sargent

PROJECT LEAD
John Lynch

NOT FOR CONSTRUCTION

Seal | Seal

ALDI Inc.
1171 North State Road 7
Royal Palm Beach, FL 33411
(561) 640-8000

ALDI Inc. Store #: 50
Coconut Crossing, FL
12850 Northlake Boulevard
Palm Beach Gardens, FL 33412
Palm Beach County
Project Name & Location:

Wall Sections
Drawing Name:

Prototype: V7.08 LHRD
Type: GROUND UP
Drawn By: JAH
Scale: As Noted

Project No. 22-0267A

Drawing No. A-305

NOTES:
1. REFER TO SCHEDULES ON DRAWING A-603 FOR ALL FINISH AND INSULATION CALL-OUTS.
2. WRB TO BE SEALED AND TAPED PER MF RECOMMENDATION. WRB TO WRAP INSIDE OPENINGS AND ALL JOINTS LAPPED PER MFR INSTALLATION REQMT.
3. PROTECT ALL EXTERIOR SHEATHING DURING CONSTRUCTION, AS REQUIRED BY MFR.
4. ALL MTL STUD FURRING AT PERIMETER CMU WALLS SHALL BE ATTACHED IN ACCORDANCE TO DETAILS: D1/A506
5. REFERENCE STRUCTURAL DRAWINGS FOR ALL CMU BOND BEAM, REINFORCEMENT AND GROUTING REQUIREMENTS.
6. PROVIDE TRIM-TEX TEAR AWAY L-BEAD MOLDING (FINISHABLE EDGE) AT ALL EXPOSED GYPSUM BOARD EDGES (EXCEPT TOP OF WALLS AT ROOF IN THE BACK ROOM).
7. ALL BLOCKING/SUB FASCIA BEHIND ALUMINUM BRAKE METAL & ALUMINUM FACED COMPOSITE PANEL SHALL BE PREMIUM GRADE AS SPECIFIED IN SECTION 061053, PARAGRAPH 2.3C.
8. INSTALL COUNTER FLASHINGS AT BASE OF WALLS OVER SELF-ADHERING FLASHING EXTENDING TO FOUNDATION WALL. LAP WRB OVER COUNTER FLASHING, TYP.
9. ATTACH PLYWOOD WALL SHEATHING & CONTINUOUS INSULATION PANELS TO METAL STUD FRAMING, USING SPECIFIED FASTENERS SPACED 16" O.C. EACH WAY (MIN) TO SUPPORT UP TO 10 PSF DEAD LOAD OF THE FIBER CEMENT WALL PANEL SYSTEM, INSULATION, & SHEATHING AND THE MAXIMUM WIND SPEED AND DESIGN PRESSURES INDICATED ON SHEET S-001.
10. REFER TO STRUCT DWGS FOR ALL FOUNDATION/FOOTING REQUIREMENTS (INCLUDING DEPTHS).
11. ALL ALUMINUM STOREFRONT/CURTAIN WALL FRAMING SHALL BE INSTALLED WITH THE EXTERIOR FRAME FACE ALIGNED WITH THE EXTERIOR BUILDING WALL LINE UNLESS NOTED OTHERWISE. NO GRAY BLOCK OR EXTERIOR SHEATHING SHALL BE EXPOSED AT JAMBS, HEADS, AND SILLS
12. PROVIDE CONTINUOUS SEALANT ALONG THE CART BUMPER/SIDEWALK JOINT.
13. PROVIDE BOND BREAKER BETWEEN DISSIMILAR METALS.
14. REFER TO RESPONSIBILITY SCHEDULES FOR ROOF SCOPE.

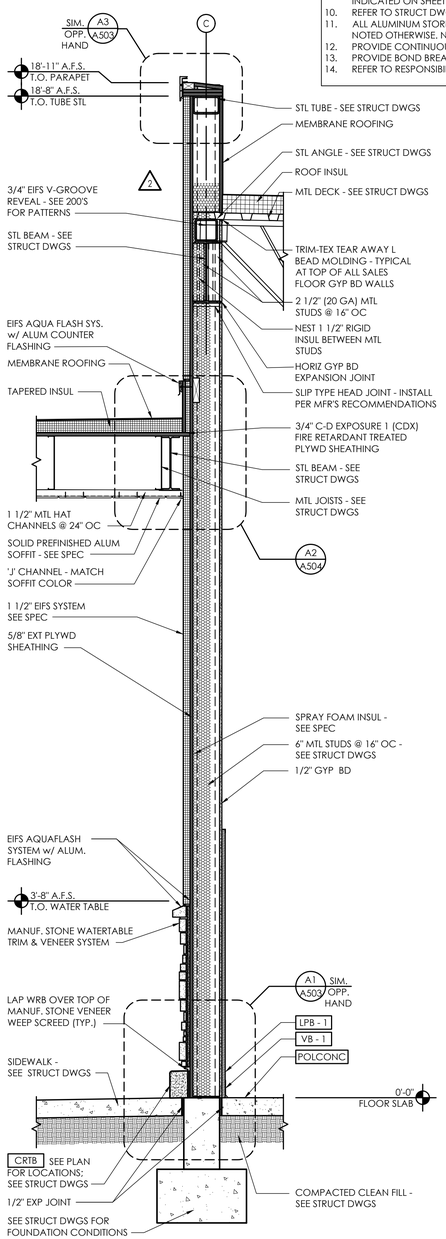

D1 Wall Section - Cart Storage End Wall
SCALE: 3/4" = 1'-0"

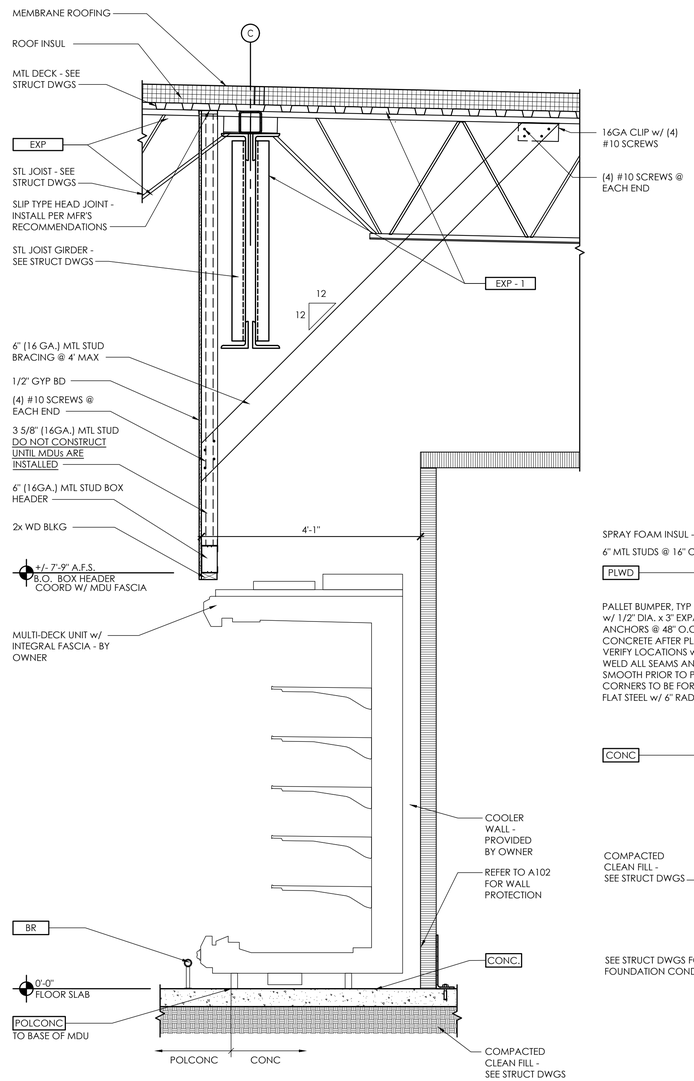

C1 Wall Section - MDU at Cooler
SCALE: 3/4" = 1'-0"

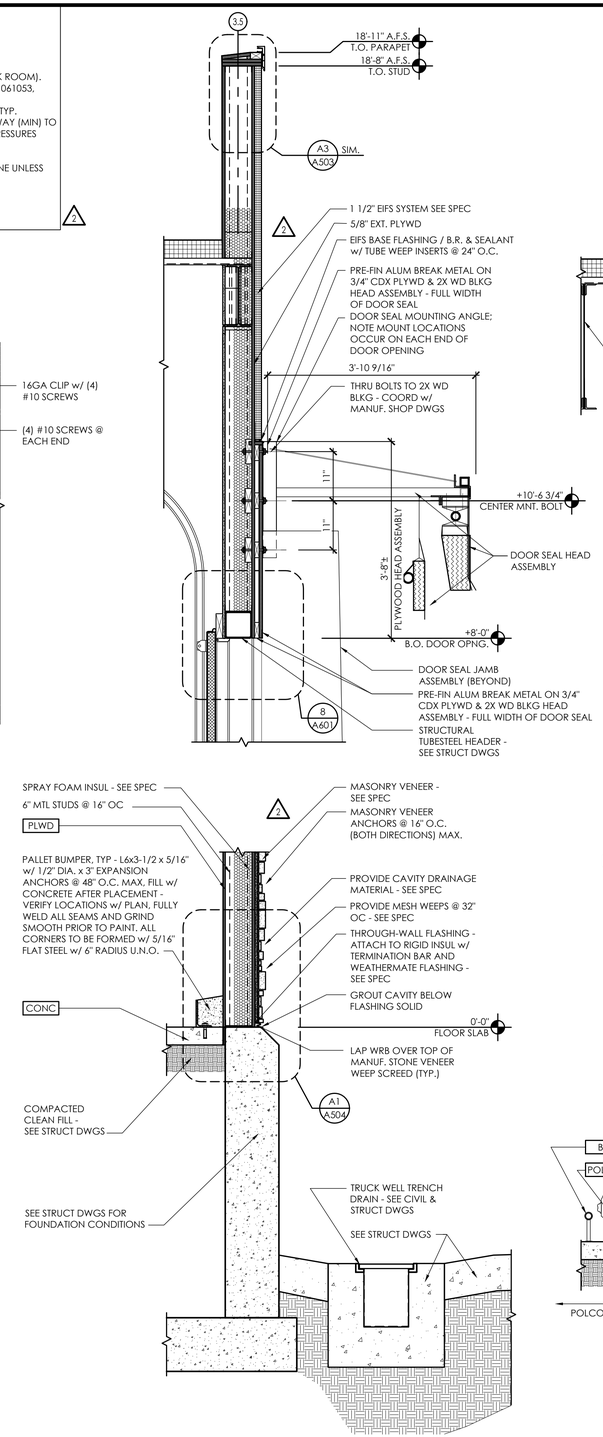

B1 Partial Wall Section - Dock Wall & Truck Well Trench Drain
SCALE: 3/4" = 1'-0"

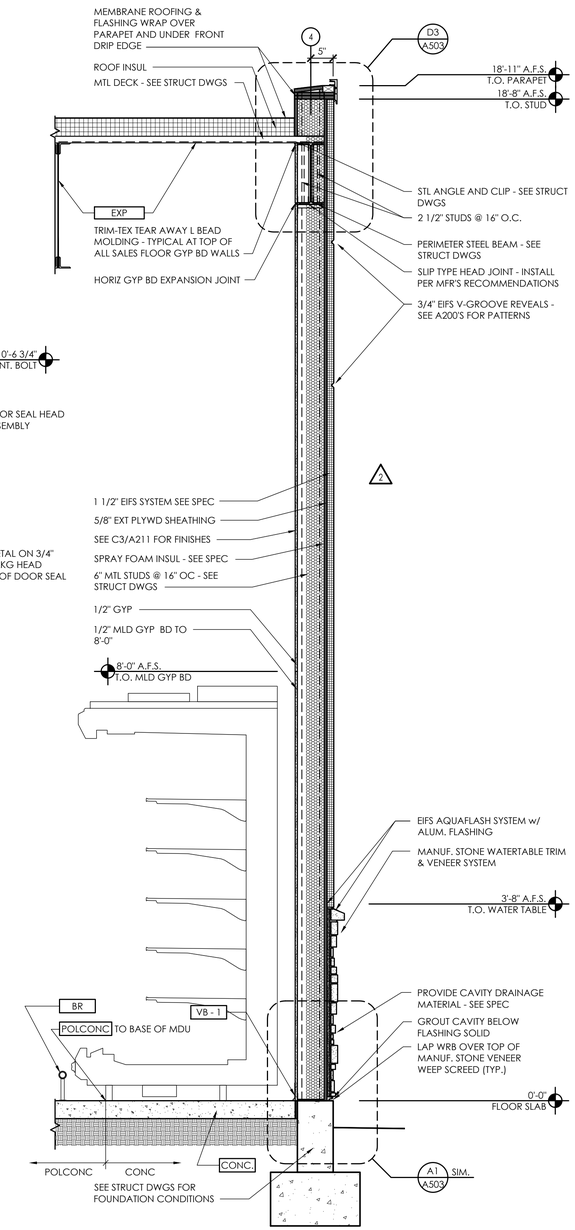

A1 Wall Section - Sales Floor at MDU
SCALE: 3/4" = 1'-0"

PLOTTED: 7/29/2025 9:45 AM

APD ENGINEERING ARCHITECTURE
615 Fishers Run Victor, NY 14564
585.742.2222 - www.apd.com

Copyright © 2024
APD Engineering & Architecture
615 Fishers Run
Victor, NY 14564

Drawing Alteration
It is a violation of law for any person, unless acting under the direction of licensed Architect, Professional Engineer, Landscape Architect, or Land Surveyor to alter any item on this document in any way. Any licensee who alters this document is required by law to affix his or her seal and to add the notation "Altered By" followed by his or her signature and the specific description of the alteration or revision.

DO NOT SCALE PLANS
Copying, Printing, Software and other processes required to produce these prints can stretch or shrink the actual paper or layout. Therefore, scaling of this drawing may be inaccurate. Contact APD E&A with any need for additional dimensions or clarifications.

Issued:		Date:
A	Issued for Permit	07/08/24
B	Issued for Bid	07/29/25
C		
D		
E		

Revisions:		Date:
1	Owner Changes	11/18/24
2	Owner Changes	07/29/25
3		
4		
5		
6		
7		
8		
9		
10		
11		
12		

PROJECT ARCHITECT/ENGINEER
Daniel Sargent
PROJECT LEAD
John Lynch

NOT FOR CONSTRUCTION
Seal Seal

ALDI Inc.
1171 North State Road 7
Royal Palm Beach, FL 33411
(561) 640-8000

ALDI Inc. Store #: 50
Coconut Crossing, FL
12850 Northlake Boulevard
Palm Beach Gardens, FL 33412
Palm Beach County
Project Name & Location:

Wall Sections
Drawing Name:

Prototype: V7.08 LHRD
Type: GROUND UP
Drawn By: JAH
Scale: As Noted
Project No. 22-0267A
Drawing No. A-306

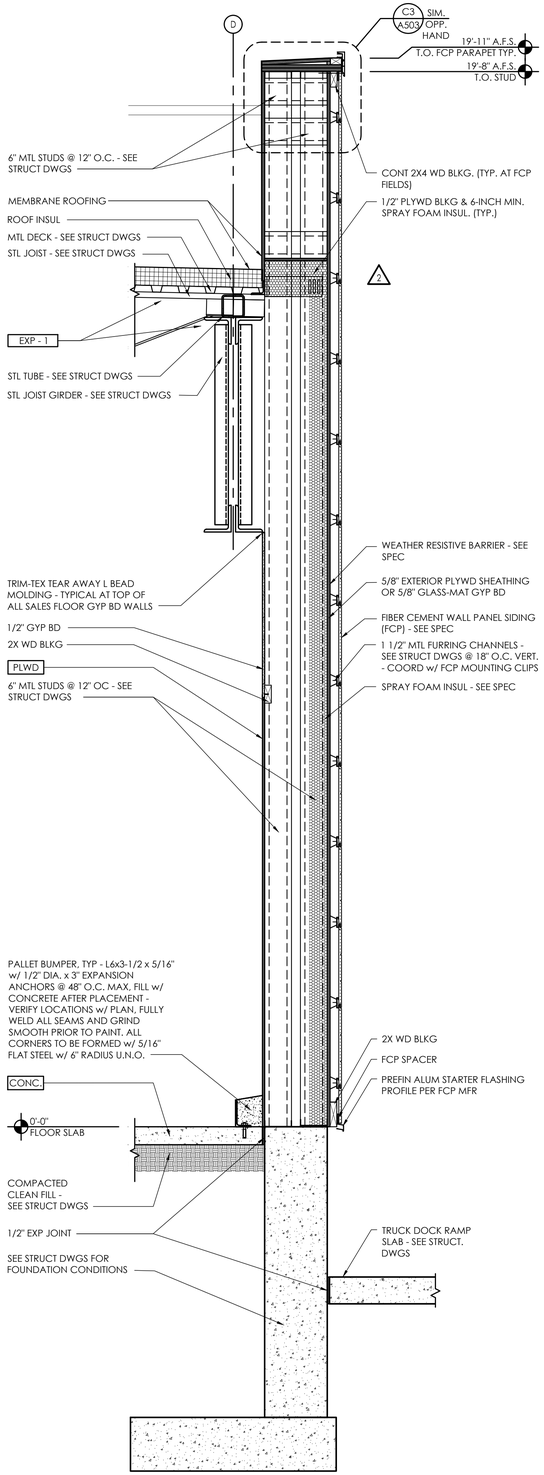

Wall Section - Fiber Cement Panel at Rear Dock

D1 SCALE: 3/4" = 1'-0"

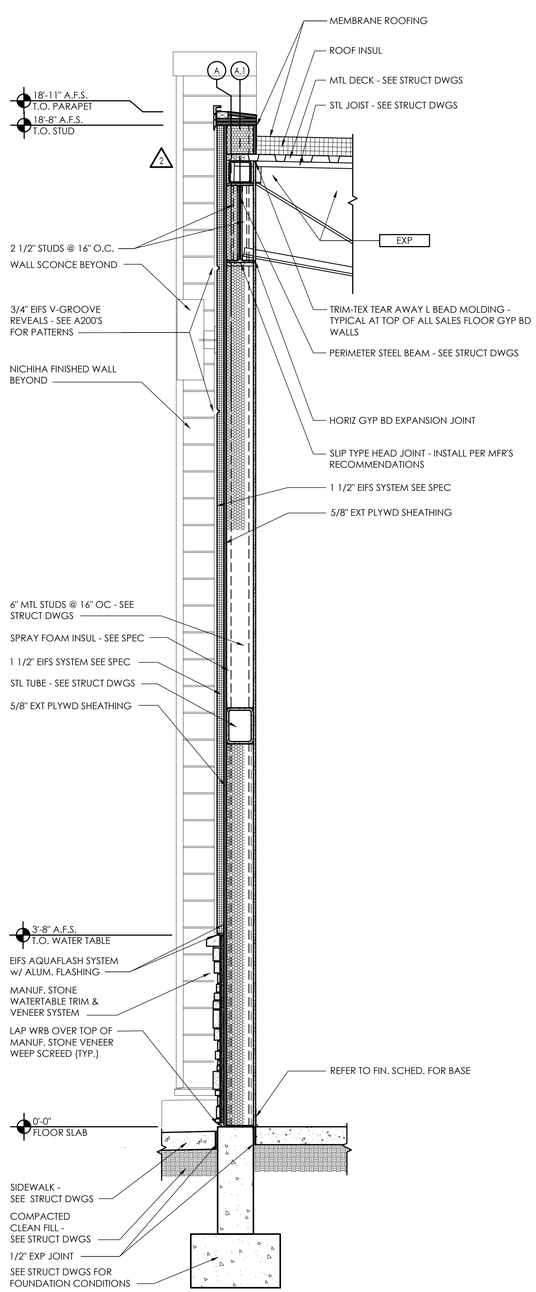

Wall Section - Water Table at EIFS Field

C1 SCALE: 3/4" = 1'-0"

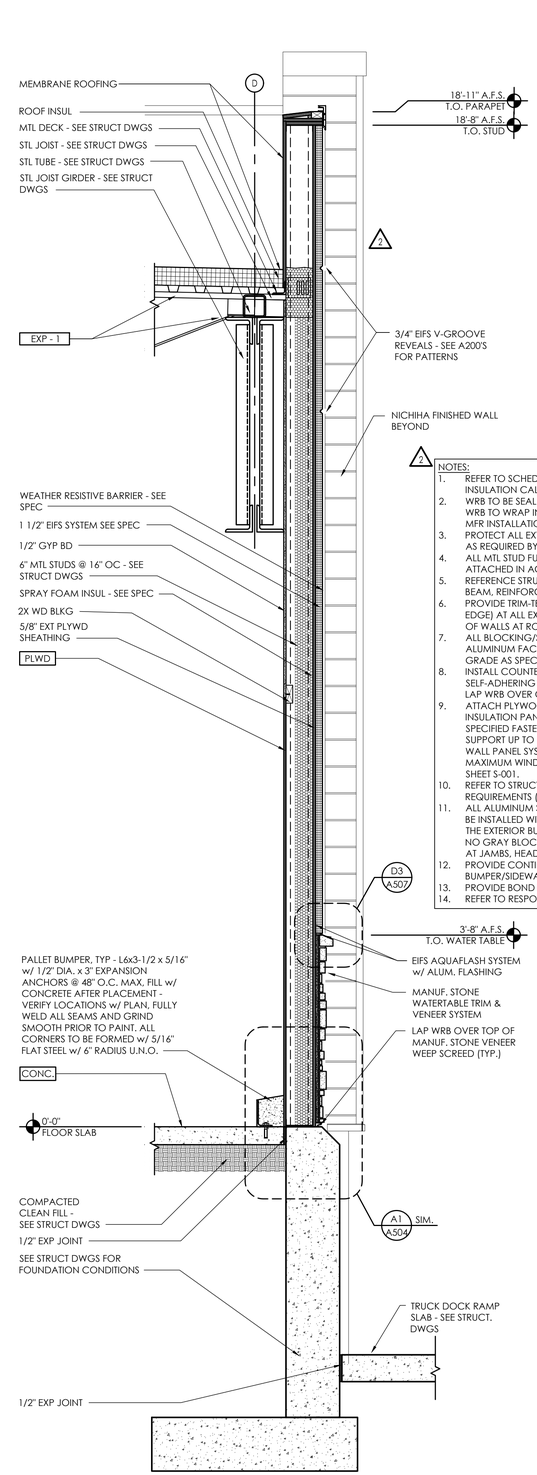

Wall Section - Water Table at Rear Dock EIFS Field

B1 SCALE: 3/4" = 1'-0"

2

NOTES:

1. REFER TO SCHEDULES ON DRAWING A-603 FOR ALL FINISH AND INSULATION CALL-OUTS.
2. WRB TO BE SEALED AND TAPED PER MF RECOMMENDATION. WRB TO WRAP INSIDE OPENINGS AND ALL JOINTS LAPPED PER MFR INSTALLATION REQMT.
3. PROTECT ALL EXTERIOR SHEATHING DURING CONSTRUCTION, AS REQUIRED BY MFR.
4. ALL MTL STUD FURRING AT PERIMETER CMU WALLS SHALL BE ATTACHED IN ACCORDANCE TO DETAILS: D1/A506
5. REFERENCE STRUCTURAL DRAWINGS FOR ALL CMU BOND BEAM, REINFORCEMENT AND GROUTING REQUIREMENTS.
6. PROVIDE TRIM-TEX TEAR AWAY L-BEAD MOLDING (FINISHABLE EDGE) AT ALL EXPOSED GYPSUM BOARD EDGES (EXCEPT TOP OF WALLS AT ROOF IN THE BACK ROOM).
7. ALL BLOCKING/SUB FASCIA BEHIND ALUMINUM BRAKE METAL & ALUMINUM FACED COMPOSITE PANEL SHALL BE PREMIUM GRADE AS SPECIFIED IN SECTION 061053, PARAGRAPH 2.3C.
8. INSTALL COUNTER FLASHINGS AT BASE OF WALLS OVER SELF-ADHERING FLASHING EXTENDING TO FOUNDATION WALL. LAP WRB OVER COUNTER FLASHING, TYP.
9. ATTACH PLYWOOD WALL SHEATHING & CONTINUOUS INSULATION PANELS TO METAL STUD FRAMING, USING SPECIFIED FASTENERS SPACED 16" O.C. EACH WAY (MIN) TO SUPPORT UP TO 10 PSF DEAD LOAD OF THE FIBER CEMENT WALL PANEL SYSTEM, INSULATION, & SHEATHING AND THE MAXIMUM WIND SPEED AND DESIGN PRESSURES INDICATED ON SHEET S-001.
10. REFER TO STRUCT DWGS FOR ALL FOUNDATION/FOOTING REQUIREMENTS (INCLUDING DEPTHS).
11. ALL ALUMINUM STOREFRONT/CURTAIN WALL FRAMING SHALL BE INSTALLED WITH THE EXTERIOR FRAME FACE ALIGNED WITH THE EXTERIOR BUILDING WALL LINE UNLESS NOTED OTHERWISE. NO GRAY BLOCK OR EXTERIOR SHEATHING SHALL BE EXPOSED AT JAMBS, HEADS, AND SILLS
12. PROVIDE CONTINUOUS SEALANT ALONG THE CART BUMPER/SIDEWALK JOINT.
13. PROVIDE BOND BREAKER BETWEEN DISSIMILAR METALS.
14. REFER TO RESPONSIBILITY SCHEDULES FOR ROOF SCOPE.

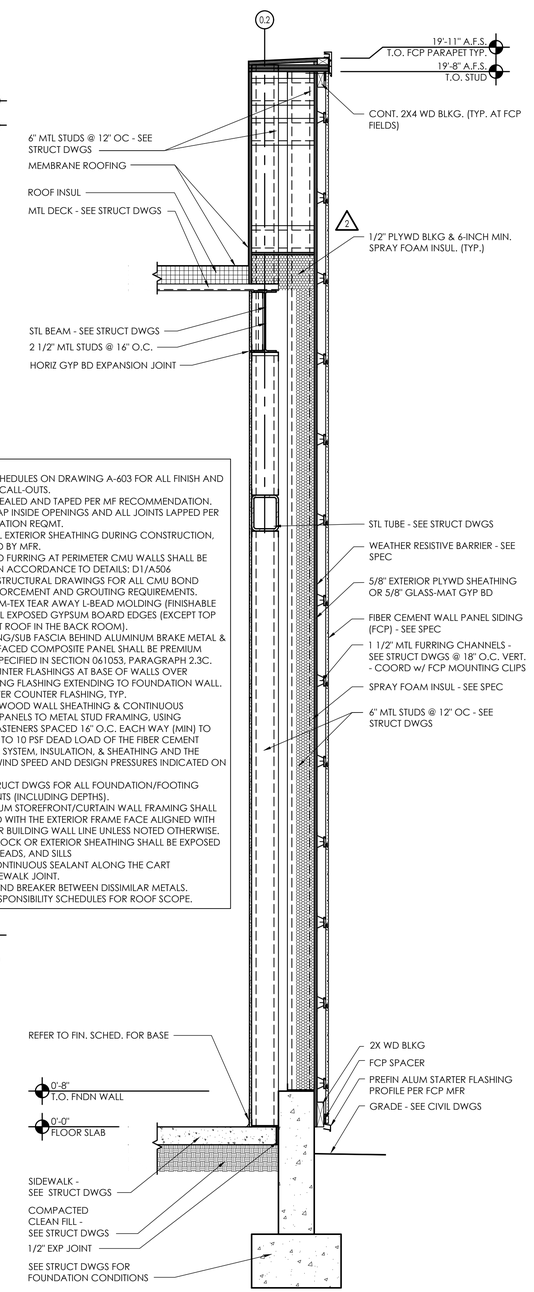

Wall Section - Fiber Cement Panel at Braced Wall

A1 SCALE: 3/4" = 1'-0"

PLOTTED: 7/29/2025 9:45 AM

APD ENGINEERING ARCHITECTURE
615 Fishers Run Victor, NY 14564
585.742.2222 - www.apd.com

Copyright © 2024
APD Engineering & Architecture
615 Fishers Run
Victor, NY 14564

Drawing Alteration

It is a violation of law for any person, unless acting under the direction of licensed Architect, Professional Engineer, Landscape Architect, or Land Surveyor to alter any item on this document in any way. Any licensee who alters this document is required by law to affix his or her seal and to add the notation "Altered By" followed by his or her signature and the specific description of the alteration or revision.

DO NOT SCALE PLANS

Copying, Printing, Software and other processes required to produce these prints can stretch or shrink the actual paper or layout. Therefore, scaling of this drawing may be inaccurate. Contact APD E&A with any need for additional dimensions or clarifications.

Issued:		Date:
A	Issued for Permit	07/08/24
B	Issued for Bid	07/29/25
C		
D		
E		

Revisions:		Date:
1	Owner Changes	11/18/24
2	Owner Changes	07/29/25
3		
4		
5		
6		
7		
8		
9		
10		
11		
12		

PROJECT ARCHITECT/ENGINEER
Daniel Sargent

PROJECT LEAD
John Lynch

NOT FOR CONSTRUCTION

Seal | Seal

ALDI Inc.
1171 North State Road 7
Royal Palm Beach, FL 33411
(561) 640-8000

ALDI Inc. Store #: 50
Coconut Crossing, FL 1
12850 Northlake Boulevard
Palm Beach Gardens, FL 33412
Palm Beach County

Project Name & Location:

Wall Sections

Drawing Name:

Prototype: V7.08 LHRD	Project No. 22-0267A
Type: GROUND UP	
Drawn By: JAH	A-307
Scale: As Noted	Drawing No.

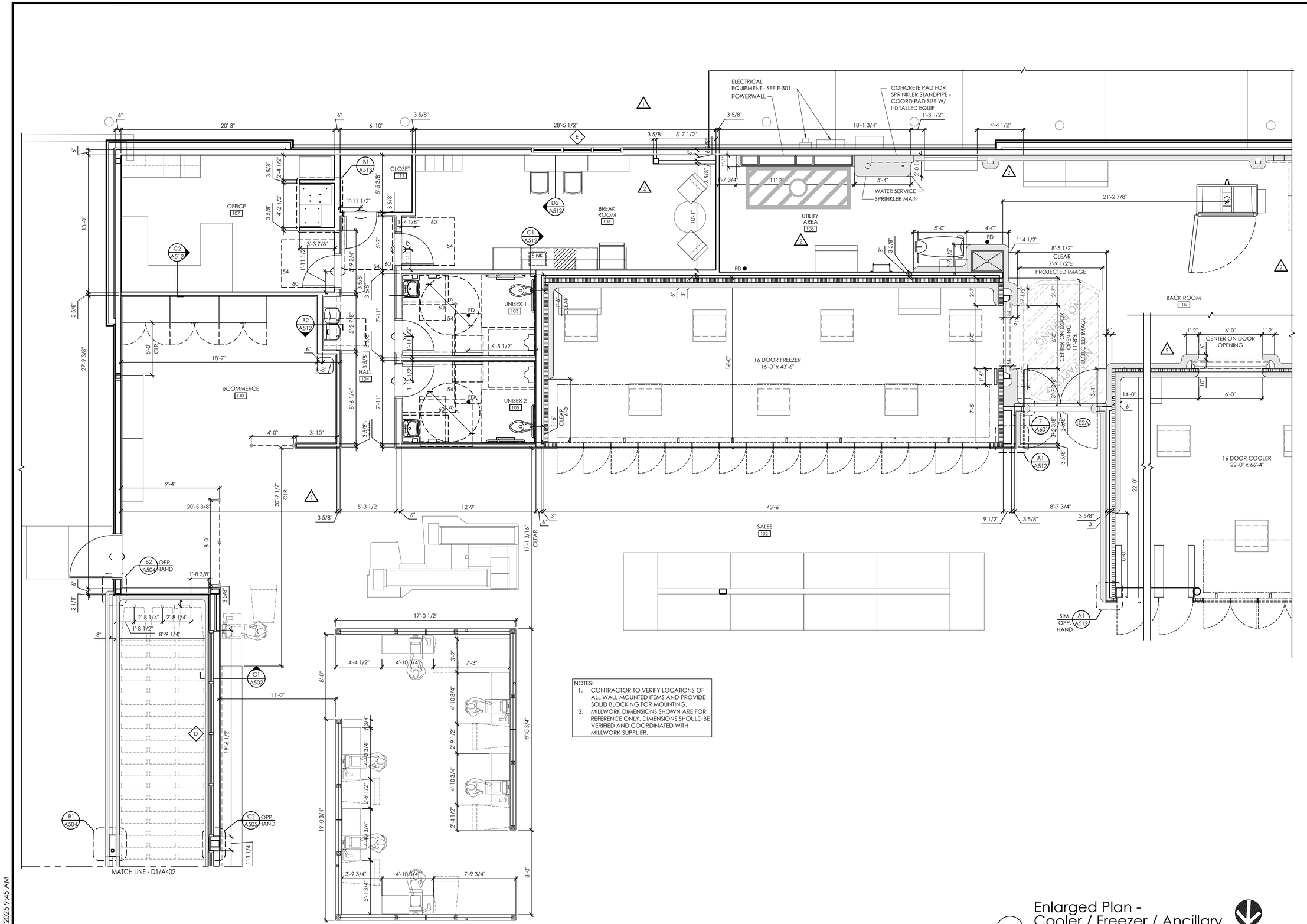

A1 Enlarged Plan - Cooler / Freezer / Ancillary

SCALE: 1/4" = 1'-0"

PLOTTED: 7/29/2025 9:45 AM

APD ENGINEERING ARCHITECTURE
615 Fishers Run Victor, NY 14564
585.742.2222 - www.apd.com

Copyright © 2024
APD Engineering & Architecture
615 Fishers Run
Victor, NY 14564

Drawing Alteration

It is a violation of law for any person, unless acting under the direction of licensed Architect, Professional Engineer, Landscape Architect, or Land Surveyor to alter any item on this document in any way. Any licensee who alters this document is required by law to affix his or her seal and to add the notation "Altered By" followed by his or her signature and the specific description of the alteration or revision.

DO NOT SCALE PLANS

Copying, Printing, Software and other processes required to produce these prints can stretch or shrink the actual paper or layout. Therefore, scaling of this drawing may be inaccurate. Contact APD E&A with any need for additional dimensions or clarifications.

Issued:		Date:
A	Issued for Permit	07/08/24
B	Issued for Bid	07/29/25
C		
D		
E		

Revisions:		Date:
1	Owner Changes	11/18/24
2	Owner Changes	07/29/25
3		
4		
5		
6		
7		
8		
9		
10		
11		
12		

PROJECT ARCHITECT/ENGINEER
Daniel Sargent

PROJECT LEAD
John Lynch

NOT FOR CONSTRUCTION

Seal | Seal

ALDI Inc.
1171 North State Road 7
Royal Palm Beach, FL 33411
(561) 640-8000

ALDI Inc. Store #: 50
Coconut Crossing, FL
12850 Northlake Boulevard
Palm Beach Gardens, FL 33412
Palm Beach County

Project Name & Location:

Enlarged Plans

Drawing Name:

Prototype: V7.08 LHRD	Project No. 22-0267A
Type: GROUND UP	
Drawn By: JWL	A-401
Scale: As Noted	Drawing No.

NOTES:
1. CONTRACTOR TO VERIFY LOCATIONS OF ALL WALL MOUNTED ITEMS AND PROVIDE SOLID BLOCKING FOR MOUNTING.
2. MILLWORK DIMENSIONS SHOWN ARE FOR REFERENCE ONLY. DIMENSIONS SHOULD BE VERIFIED AND COORDINATED WITH MILLWORK SUPPLIER.

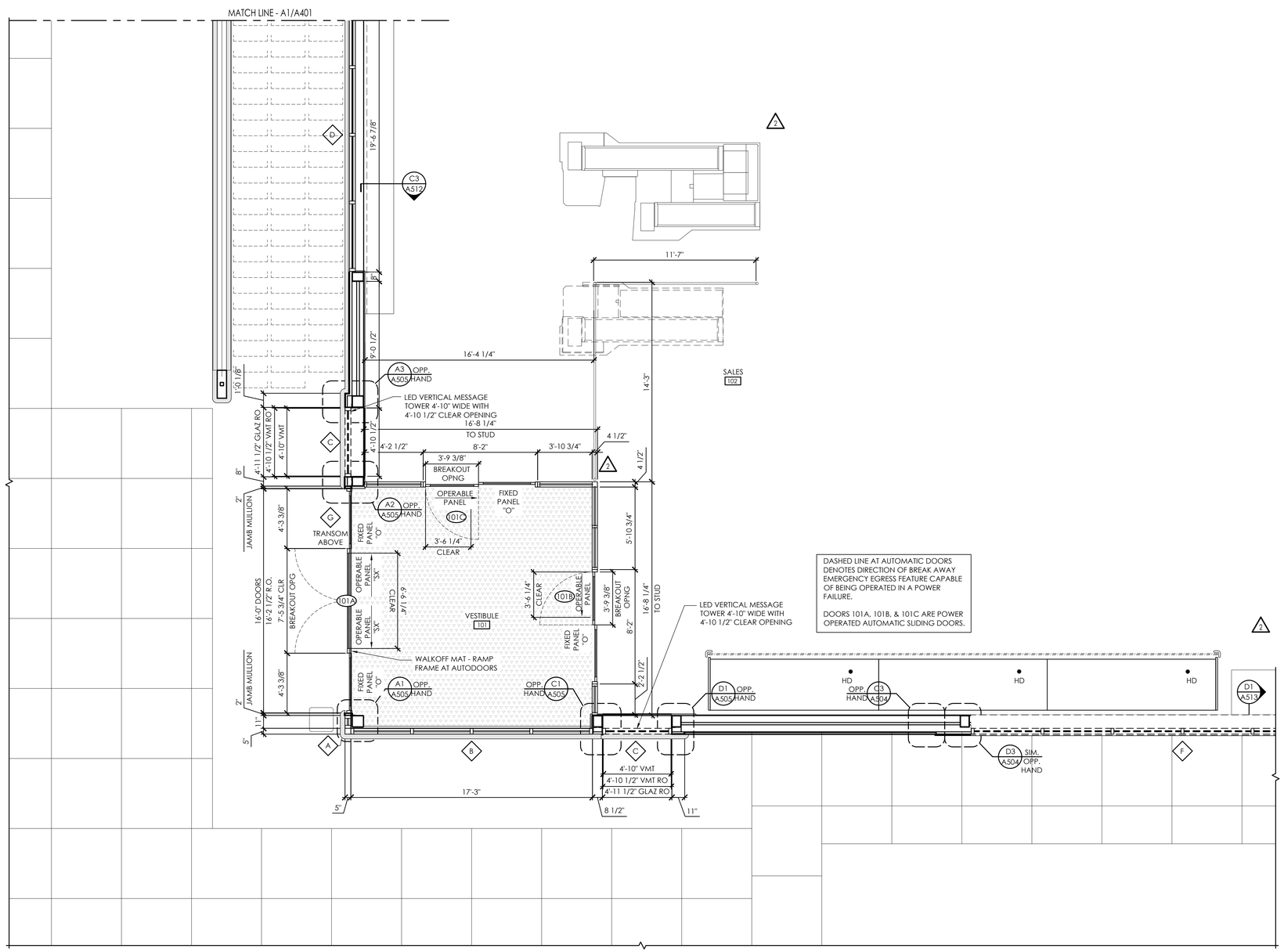

D1 Enlarged Plan - Entry
SCALE: 1/4" = 1'-0"

NORTH

PLOTTED: 7/29/2025 9:45 AM

APD ENGINEERING ARCHITECTURE
615 Fishers Run Victor, NY 14564
585.742.2222 - www.apd.com

Copyright © 2024
APD Engineering & Architecture
615 Fishers Run
Victor, NY 14564

Drawing Alteration

It is a violation of law for any person, unless acting under the direction of licensed Architect, Professional Engineer, Landscape Architect, or Land Surveyor to alter any item on this document in any way. Any licensee who alters this document is required by law to affix his or her seal and to add the notation "Altered By" followed by his or her signature and the specific description of the alteration or revision.

DO NOT SCALE PLANS

Copying, Printing, Software and other processes required to produce these prints can stretch or shrink the actual paper or layout. Therefore, scaling of this drawing may be inaccurate. Contact APD E&A with any need for additional dimensions or clarifications.

Issued:		Date:
A	Issued for Permit	07/08/24
B	Issued for Bid	07/29/25
C		
D		
E		

Revisions:		Date:
1	Owner Changes	11/18/24
2	Owner Changes	07/29/25
3		
4		
5		
6		
7		
8		
9		
10		
11		
12		

PROJECT ARCHITECT/ENGINEER
Daniel Sargent

PROJECT LEAD
John Lynch

NOT FOR CONSTRUCTION

Seal Seal

ALDI Inc.
1171 North State Road 7
Royal Palm Beach, FL 33411
(561) 640-8000

ALDI Inc. Store #: 50
Coconut Crossing, FL 1
12850 Northlake Boulevard
Palm Beach Gardens, FL 33412
Palm Beach County
Project Name & Location:

Enlarged Plans

Drawing Name:

Prototype: V7.08 LHRD	Project No. 22-0267A
Type: GROUND UP	
Drawn By: JWL	A-402
Scale: As Noted	Drawing No.

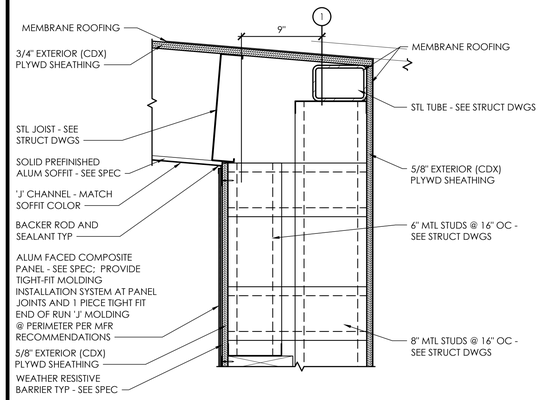

D3 Exterior Section Detail - Alum Comp Panel at Overhang

SCALE: 1 1/2" = 1'-0"

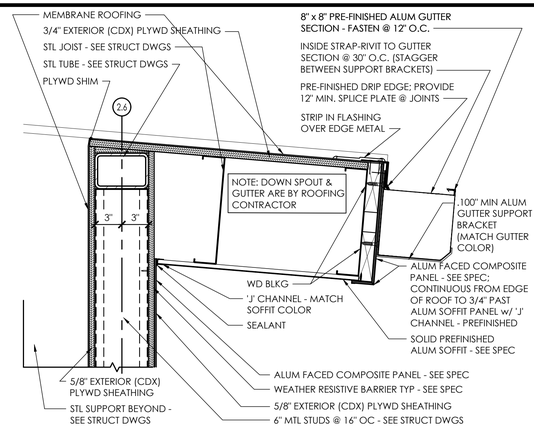

C3 Exterior Section Detail - Return Wall at Gutter

SCALE: 1 1/2" = 1'-0"

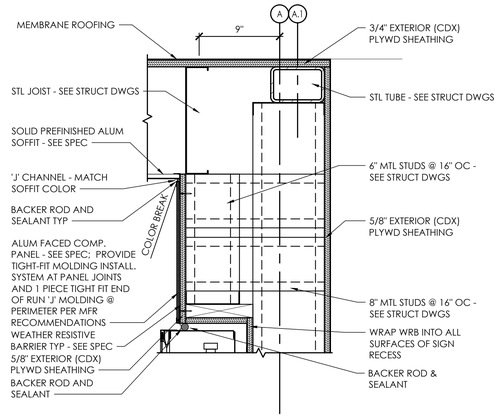

B3 Exterior Section Detail - Alum Comp Panel at Overhang

SCALE: 1 1/2" = 1'-0"

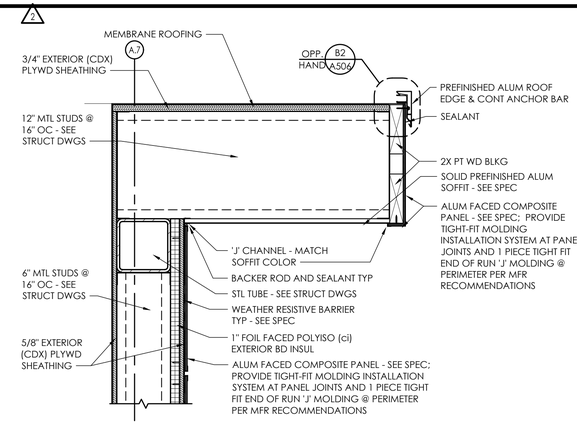

A3 Exterior Section Detail - Alum Comp Panel at Overhang

SCALE: 1 1/2" = 1'-0"

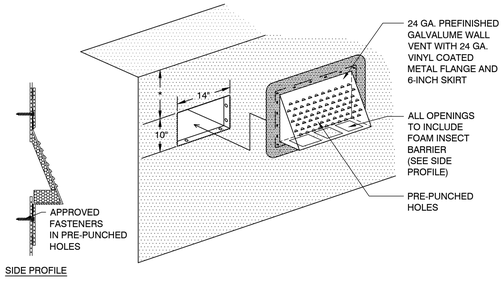

NOTE 1: PROVIDE A 14 X 10-INCH OPENING IN PARAPET WALL
* HEIGHT FROM TOP OF PARAPET DEPENDENT ON WALL ASSEMBLY.
NOTE 2: INSTALL FULLY ADHERED WALL FLASHING.
NOTE 3: CUT THE PARAPET WALL FLASHING THAT COVERS THE PRECUT OPENING AND FOLD MATERIAL TO THE INSIDE OF THE OPENING AND NAIL (INSIDE ONLY).
NOTE 4: INSTALL THE WALL VENT OVER OPENING AND FASTEN THE METAL FLANGES WITH THE PRE-PUNCHED HOLES. MINIMUM OF TWO PER SIDE.
NOTE 5: WELD THE 6-INCH SKIRT COMPLETELY ON ALL EDGES TO THE PARAPET WALL FLASHING.

D2 Exterior Detail - Parapet Vent

SCALE: N.T.S.

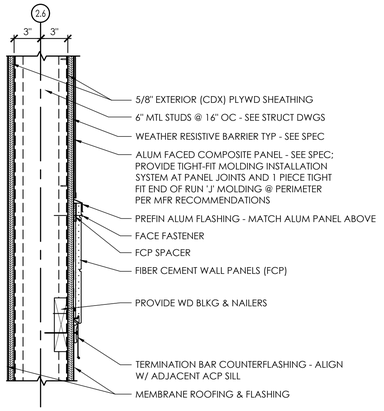

C2 Exterior Section Detail - Roof Membrane Termination at FCP

SCALE: 1 1/2" = 1'-0"

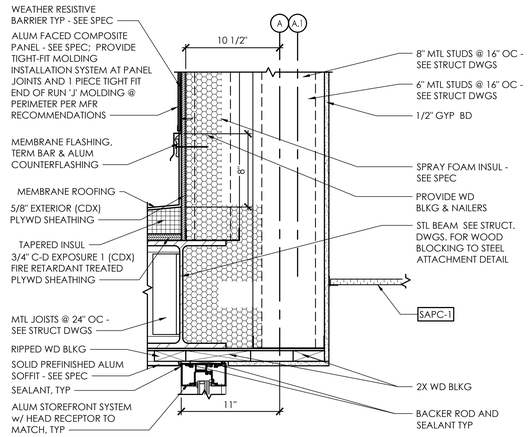

B2 Exterior Section Detail - Storefront Head at Vestibule

SCALE: 1 1/2" = 1'-0"

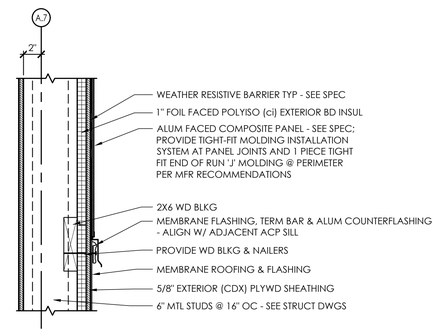

A2 Exterior Section Detail - Roof Membrane Termination at ACP

SCALE: 1 1/2" = 1'-0"

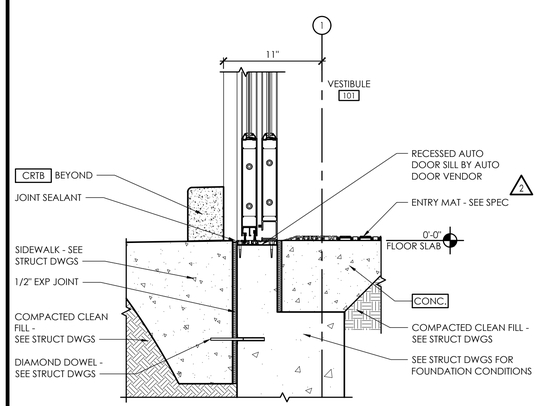

D1 Exterior Section Detail - Slab at Auto Sliding Door

SCALE: 1 1/2" = 1'-0"

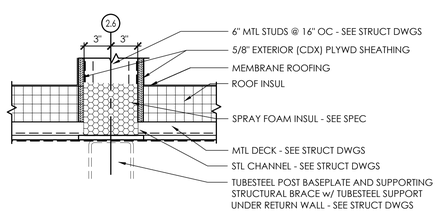

C1 Exterior Section Detail - Roof Membrane at Return Wall

SCALE: 1 1/2" = 1'-0"

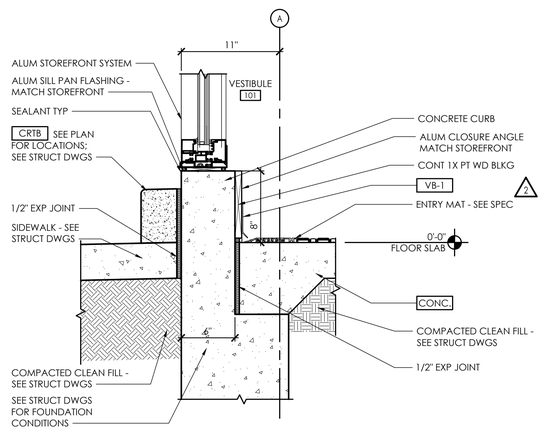

B1 Exterior Section Detail - Curb at Vestibule Storefront

SCALE: 1 1/2" = 1'-0"

2 NOTES:
1. REFER TO SCHEDULES ON DRAWING A-603 FOR ALL FINISH AND INSULATION CALL-OUTS.
2. REFER TO RESPONSIBILITY SCHEDULES FOR ROOF SCOPE.

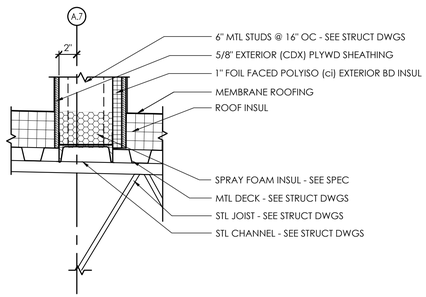

A1 Exterior Section Detail - Roof Membrane at Return Wall

SCALE: 1 1/2" = 1'-0"

D | C | B | A

APD ENGINEERING ARCHITECTURE
615 Fishers Run Victor, NY 14564
585.742.2222 - www.apd.com

Copyright © 2024
APD Engineering & Architecture
615 Fishers Run
Victor, NY 14564

Drawing Alteration

It is a violation of law for any person, unless acting under the direction of licensed Architect, Professional Engineer, Landscape Architect, or Land Surveyor to alter any item on this document in any way. Any licensee who alters this document is required by law to affix his or her seal and to add the notation "Altered By" followed by his or her signature and the specific description of the alteration or revision.

DO NOT SCALE PLANS

Copying, Printing, Software and other processes required to produce these prints can stretch or shrink the actual paper or layout. Therefore, scaling of this drawing may be inaccurate. Contact APD E&A with any need for additional dimensions or clarifications.

3

Issued:		Date:
A	Issued for Permit	07/08/24
B	Issued for Bid	07/29/25
C		
D		
E		

2

Revisions:		Date:
1	Owner Changes	11/18/24
2	Owner Changes	07/29/25
3		
4		
5		
6		
7		
8		
9		
10		
11		
12		

PROJECT ARCHITECT/ENGINEER
Daniel Sargent

PROJECT LEAD
John Lynch

NOT FOR CONSTRUCTION

Seal | Seal

ALDI Inc.
1171 North State Road 7
Royal Palm Beach, FL 33411
(561) 640-8000

1

ALDI Inc. Store #: 50
Coconut Crossing, FL
12850 Northlake Boulevard
Palm Beach Gardens, FL 33412
Palm Beach County
Project Name & Location:

Exterior Details
Drawing Name:

Prototype: V7.08 LHRD	Project No. 22-0267A
Type: GROUND UP	
Drawn By: JAH	A-501
Scale: As Noted	Drawing No.

PLOTTED: 7/29/2025 9:46 AM

NOTES:
1. REFER TO SCHEDULES ON DRAWING A-603 FOR ALL FINISH AND INSULATION CALL-OUTS.
2. REFER TO RESPONSIBILITY SCHEDULES FOR ROOF SCOPE.

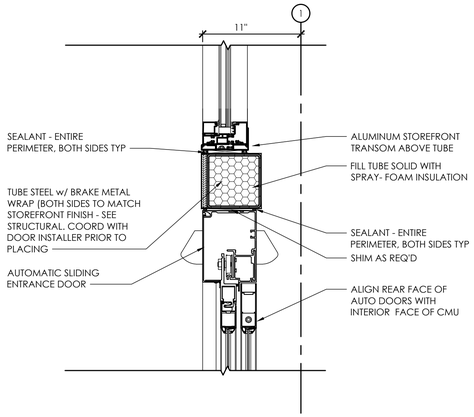

D3 Exterior Section Detail - Tube Steel at Auto Sliding Door

SCALE: 1 1/2" = 1'-0"

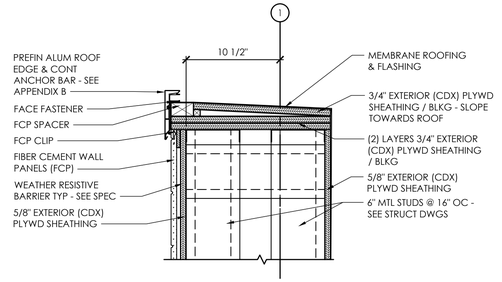

C3 Exterior Section Detail - ACP to FCP Transition

SCALE: 1 1/2" = 1'-0"

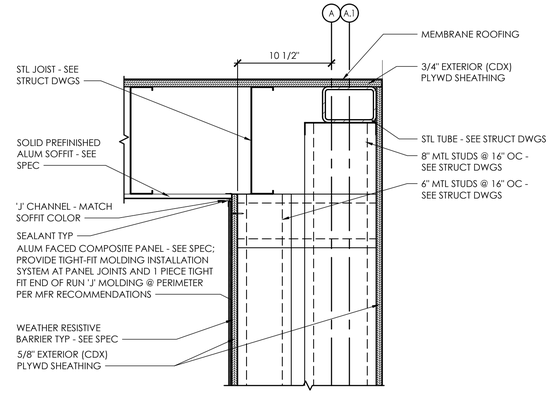

B3 Exterior Section Detail - ACP at Long Wall High Roof Parapet

SCALE: 1 1/2" = 1'-0"

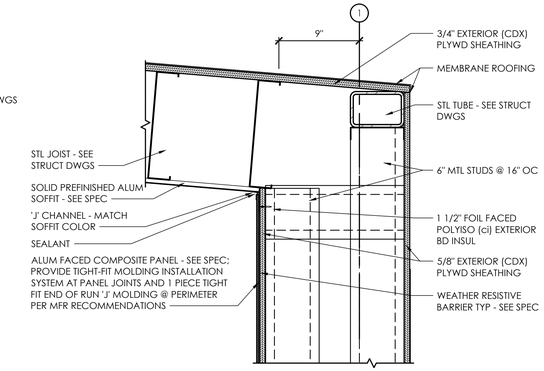

A3 Exterior Section Detail - ACP at Short Wall High Roof Parapet

SCALE: 1 1/2" = 1'-0"

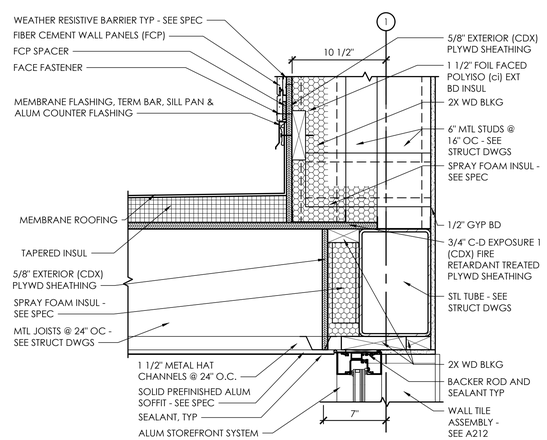

C2 Exterior Section Detail - Canopy Roof at Storefront

SCALE: 1 1/2" = 1'-0"

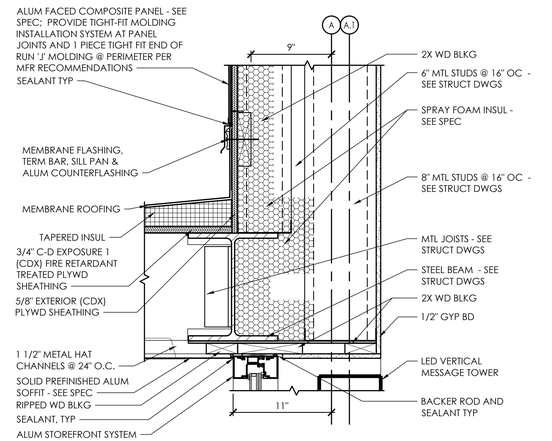

B2 Exterior Section Detail - Vertical Message Tower Head

SCALE: 1 1/2" = 1'-0"

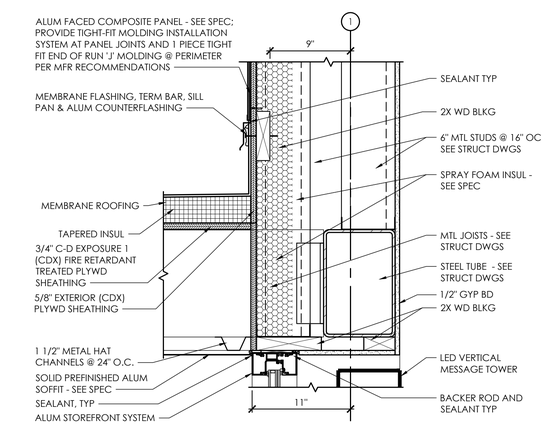

A2 Exterior Section Detail - Vertical Message Tower Head

SCALE: 1 1/2" = 1'-0"

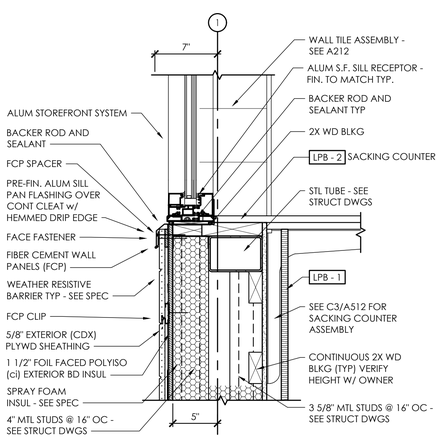

C1 Exterior Section Detail - Storefront Sill at Sacking Counter

SCALE: 1 1/2" = 1'-0"

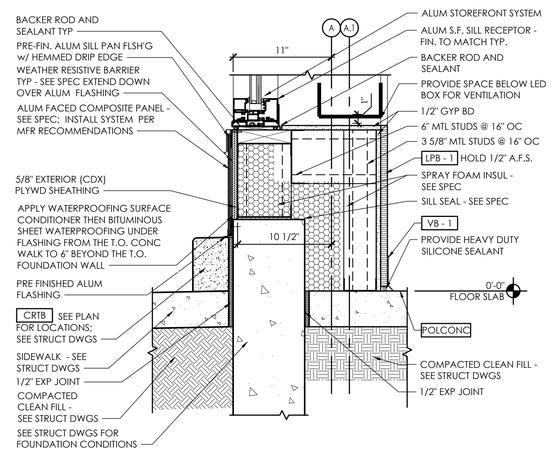

B1 Exterior Section Detail - Vertical Message Tower Sill

SCALE: 1 1/2" = 1'-0"

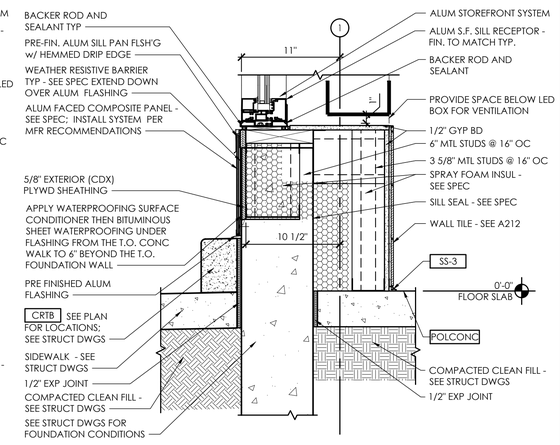

A1 Exterior Section Detail - Vertical Message Tower Sill

SCALE: 1 1/2" = 1'-0"

D | C | B | A

PLOTTED: 7/29/2025 9:46 AM

APD ENGINEERING ARCHITECTURE
615 Fishers Run Victor, NY 14564
585.742.2222 - www.apd.com

Copyright © 2024
APD Engineering & Architecture
615 Fishers Run
Victor, NY 14564

Drawing Alteration

It is a violation of law for any person, unless acting under the direction of licensed Architect, Professional Engineer, Landscape Architect, or Land Surveyor to alter any item on this document in any way. Any licensee who alters this document is required by law to affix his or her seal and to add the notation "Altered By" followed by his or her signature and the specific description of the alteration or revision.

DO NOT SCALE PLANS

Copying, Printing, Software and other processes required to produce these prints can stretch or shrink the actual paper or layout. Therefore, scaling of this drawing may be inaccurate. Contact APD E&A with any need for additional dimensions or clarifications.

3

Issued:		Date:
A	Issued for Permit	07/08/24
B	Issued for Bid	07/29/25
C		
D		
E		

2

Revisions:		Date:
1	Owner Changes	11/18/24
2	Owner Changes	07/29/25
3		
4		
5		
6		
7		
8		
9		
10		
11		
12		

PROJECT ARCHITECT/ENGINEER
Daniel Sargent

PROJECT LEAD
John Lynch

NOT FOR CONSTRUCTION

Seal | Seal

ALDI Inc.
1171 North State Road 7
Royal Palm Beach, FL 33411
(561) 640-8000

1

ALDI Inc. Store #: 50
Coconut Crossing, FL
12850 Northlake Boulevard
Palm Beach Gardens, FL 33412
Palm Beach County
Project Name & Location:

Exterior Details
Drawing Name:

Prototype: V7.08 LHRD	Project No.
Type: GROUND UP	22-0267A
Drawn By: JAH	A-502
Scale: As Noted	Drawing No.

NOTES:
1. REFER TO SCHEDULES ON DRAWING A-603 FOR ALL FINISH AND INSULATION CALL-OUTS.
2. REFER TO RESPONSIBILITY SCHEDULES FOR ROOF SCOPE.

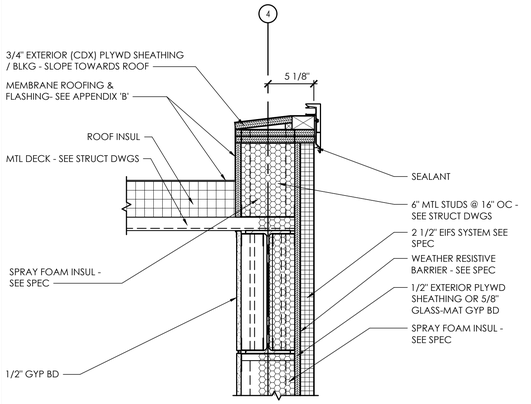

D3 Exterior Detail - Parapet

SCALE: 1 1/2" = 1'-0"

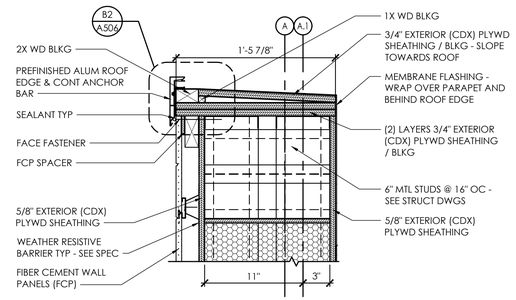

C3 Exterior Section Detail - Fiber Cement Wall Panel Parapet

SCALE: 1 1/2" = 1'-0"

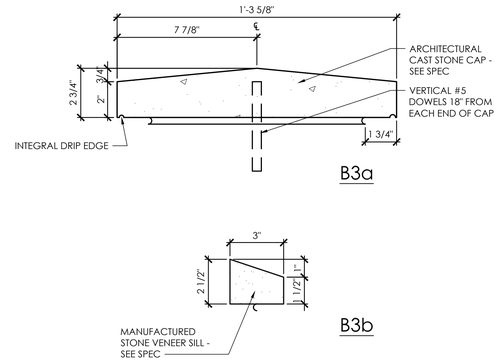

B3 Exterior Section Detail - Stone Watertable and Wall Cap

SCALE: 3" = 1'-0"

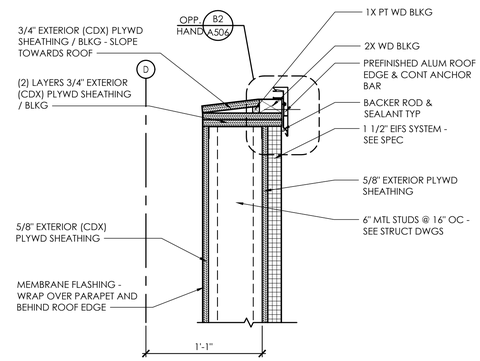

A3 Exterior Detail - Parapet

SCALE: 1 1/2" = 1'-0"

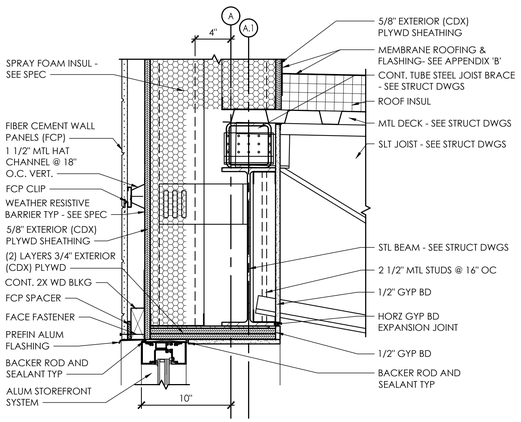

D2 Exterior Section Detail - Window Head at FCP (Long Wall)

SCALE: 1 1/2" = 1'-0"

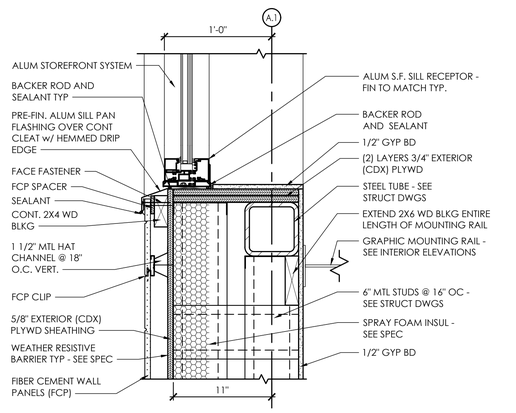

C2 Exterior Section Detail - Window Sill at FCP (Long Wall)

SCALE: 1 1/2" = 1'-0"

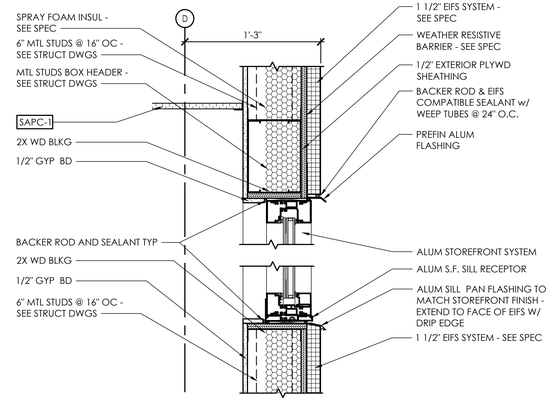

B2 Exterior Section Detail - Storefront Window Head & Sill

SCALE: 1 1/2" = 1'-0"

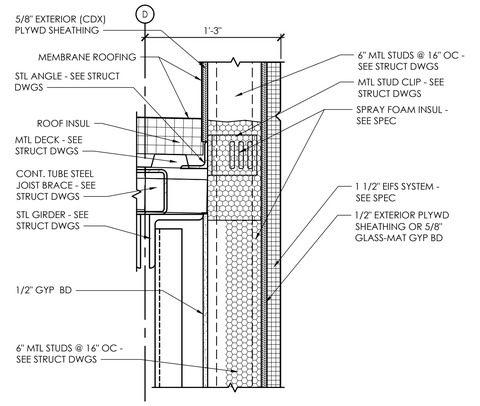

A2 Exterior Section Detail - Low Joist Bearing

SCALE: 1 1/2" = 1'-0"

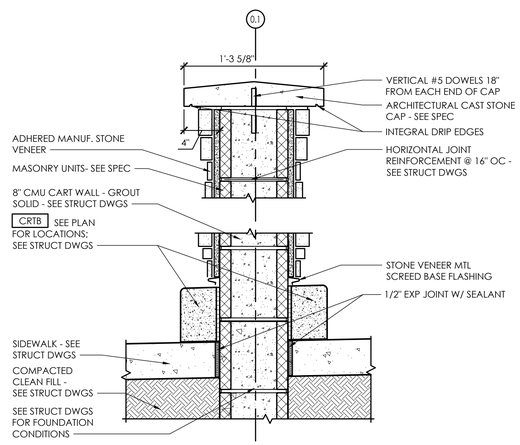

D1 Exterior Section Detail - Cart Wall

SCALE: 1 1/2" = 1'-0"

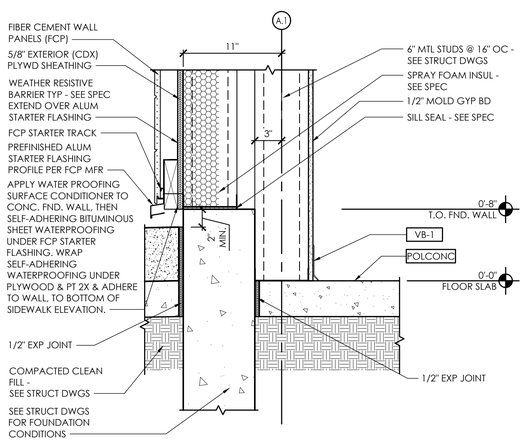

C1 Exterior Section Detail - Fiber Cement Wall Panel Base

SCALE: 1 1/2" = 1'-0"

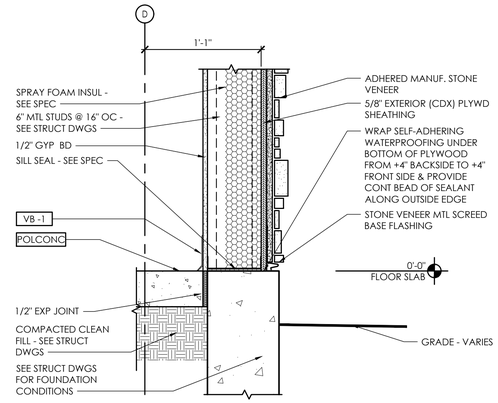

A1 Exterior Section Detail - Masonry Veneer Wall Base

SCALE: 1 1/2" = 1'-0"

D | C | B | A

APD ENGINEERING ARCHITECTURE
615 Fishers Run Victor, NY 14564
585.742.2222 - www.apd.com

Copyright © 2024
APD Engineering & Architecture
615 Fishers Run
Victor, NY 14564

Drawing Alteration

It is a violation of law for any person, unless acting under the direction of licensed Architect, Professional Engineer, Landscape Architect, or Land Surveyor to alter any item on this document in any way. Any licensee who alters this document is required by law to affix his or her seal and to add the notation "Altered By" followed by his or her signature and the specific description of the alteration or revision.

DO NOT SCALE PLANS

Copying, Printing, Software and other processes required to produce these prints can stretch or shrink the actual paper or layout. Therefore, scaling of this drawing may be inaccurate. Contact APD E&A with any need for additional dimensions or clarifications.

Issued:		Date:
A	Issued for Permit	07/08/24
B	Issued for Bid	07/29/25
C		
D		
E		

Revisions:		Date:
1	Owner Changes	11/18/24
2	Owner Changes	07/29/25
3		
4		
5		
6		
7		
8		
9		
10		
11		
12		

PROJECT ARCHITECT/ENGINEER
Daniel Sargent

PROJECT LEAD
John Lynch

NOT FOR CONSTRUCTION

Seal | Seal

ALDI Inc.
1171 North State Road 7
Royal Palm Beach, FL 33411
(561) 640-8000

ALDI Inc. Store #: 50
Coconut Crossing, FL
12850 Northlake Boulevard
Palm Beach Gardens, FL 33412
Palm Beach County

Project Name & Location:

Exterior Details

Drawing Name:

Prototype: V7.08 LHRD	Project No.
Type: GROUND UP	22-0267A
Drawn By: JAH	A-503
Scale: As Noted	Drawing No.

PLOTTED: 7/29/2025 9:47 AM

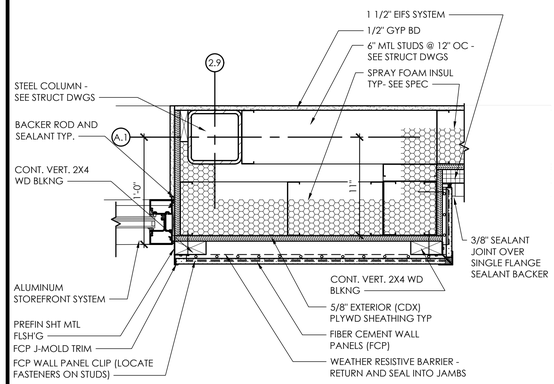

Exterior Plan Detail - Storefront at FCP

D3

SCALE: 1 1/2" = 1'-0"

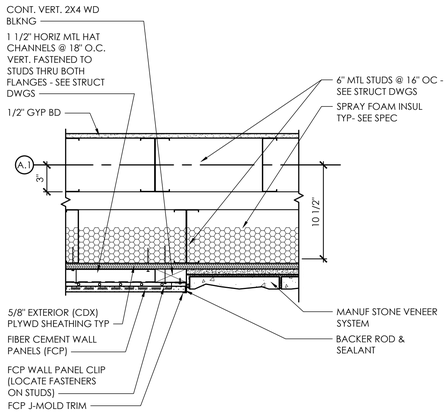

Exterior Plan Detail - FCP to Masonry Veneer

C3

SCALE: 1 1/2" = 1'-0"

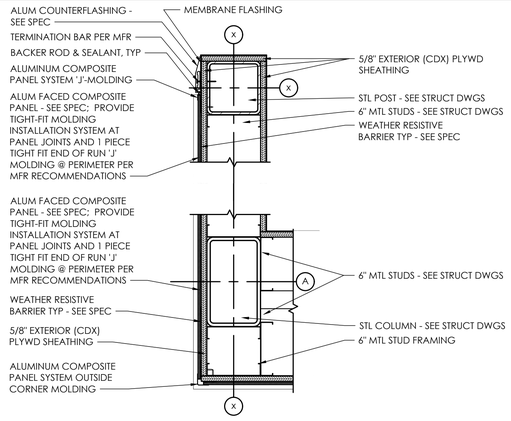

Exterior Plan Detail - ACP Outside Corner at Parapet

B3

SCALE: 1 1/2" = 1'-0"

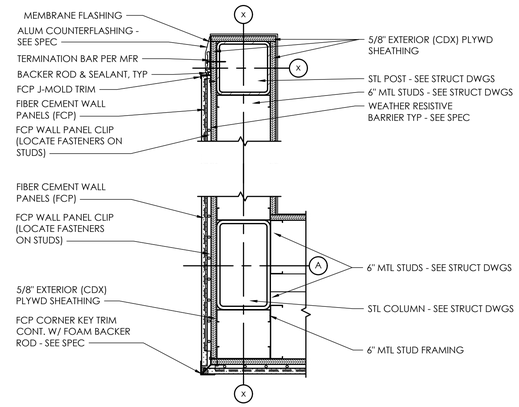

Exterior Plan Detail - FCP Outside Corner at Parapet

A3

SCALE: 1 1/2" = 1'-0"

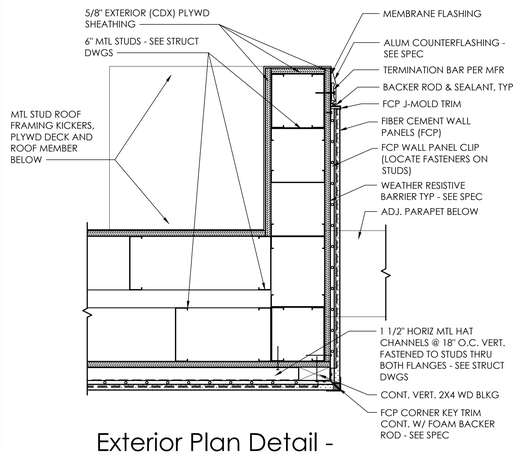

Exterior Plan Detail - FCP Return Wall Above Roof

D2

SCALE: 1 1/2" = 1'-0"

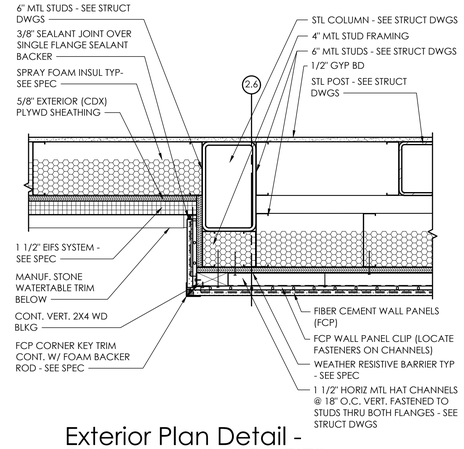

Exterior Plan Detail - FCP Bump-Out To EIFS

C2

SCALE: 1 1/2" = 1'-0"

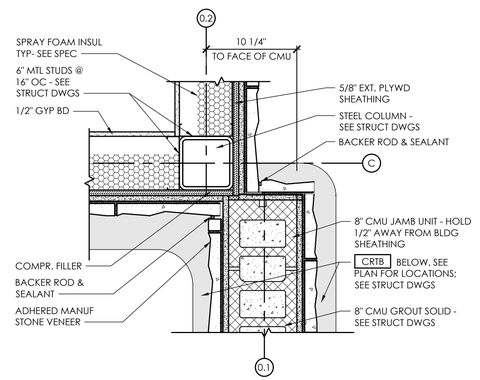

Exterior Plan Detail - Cart Wall at Building Corner

B2

SCALE: 1 1/2" = 1'-0"

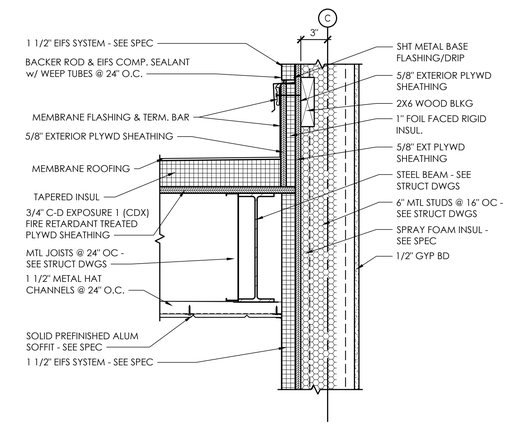

Exterior Section Detail - End Wall at Cart Corral

A2

SCALE: 1 1/2" = 1'-0"

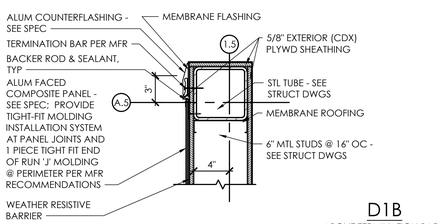

D1B

ABOVE TERMINATION BAR

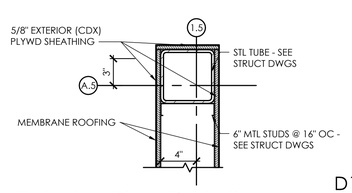

D1A

BELOW TERMINATION BAR

Exterior Plan Detail - Edge of Return Parapet on Roof

D1

SCALE: 1 1/2" = 1'-0"

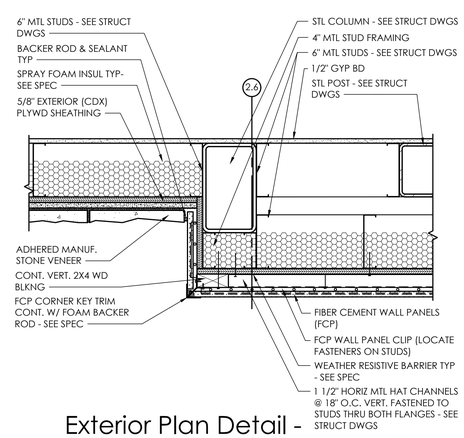

Exterior Plan Detail - FCP Bump-Out To Masonry Veneer

C1

SCALE: 1 1/2" = 1'-0"

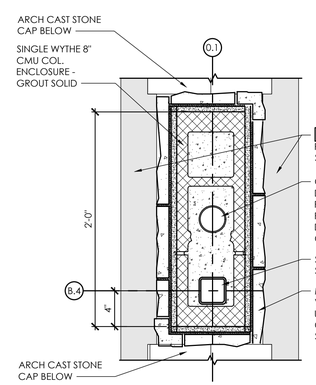

Exterior Plan Detail - Column Enclosure @ Cart Wall

B1

SCALE: 1 1/2" = 1'-0"

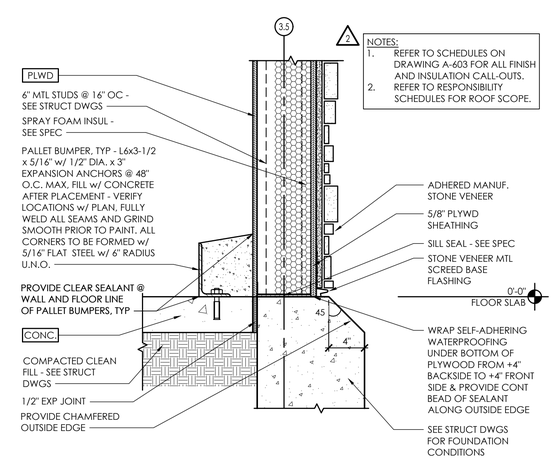

Exterior Section Detail - Back Room Wall Base at CPB

A1

SCALE: 1 1/2" = 1'-0"

PLOTTED: 7/29/2025 9:47 AM

D | C | B | A

APD ENGINEERING ARCHITECTURE
615 Fishers Run Victor, NY 14564
585.742.2222 - www.apd.com

Copyright © 2024
APD Engineering & Architecture
615 Fishers Run
Victor, NY 14564

Drawing Alteration

It is a violation of law for any person, unless acting under the direction of licensed Architect, Professional Engineer, Landscape Architect, or Land Surveyor to alter any item on this document in any way. Any licensee who alters this document is required by law to affix his or her seal and to add the notation "Altered By" followed by his or her signature and the specific description of the alteration or revision.

DO NOT SCALE PLANS

Copying, Printing, Software and other processes required to produce these prints can stretch or shrink the actual paper or layout. Therefore, scaling of this drawing may be inaccurate. Contact APD E&A with any need for additional dimensions or clarifications.

3

Issued:		Date:
A	Issued for Permit	07/08/24
B	Issued for Bid	07/29/25
C		
D		
E		

2

Revisions:		Date:
1	Owner Changes	11/18/24
2	Owner Changes	07/29/25
3		
4		
5		
6		
7		
8		
9		
10		
11		
12		

PROJECT ARCHITECT/ENGINEER
Daniel Sargent

PROJECT LEAD
John Lynch

NOT FOR CONSTRUCTION

Seal | Seal

ALDI Inc.
1171 North State Road 7
Royal Palm Beach, FL 33411
(561) 640-8000

1

ALDI Inc. Store #: 50
Coconut Crossing, FL
12850 Northlake Boulevard
Palm Beach Gardens, FL 33412
Palm Beach County

Project Name & Location:

Exterior Details

Drawing Name:

Prototype:	Project No.
V7.08 LHRD	22-0267A
Type: GROUND UP	
Drawn By: JAH	A-504
Scale: As Noted	Drawing No.

NOTES:
1. REFER TO SCHEDULES ON DRAWING A-603 FOR ALL FINISH AND INSULATION CALL-OUTS.
2. REFER TO RESPONSIBILITY SCHEDULES FOR ROOF SCOPE.

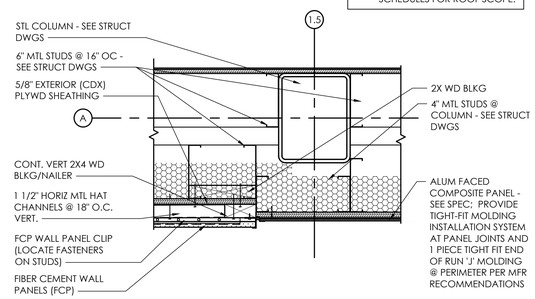

B3 Exterior Plan Detail - ACP to FCP Transition

SCALE: 1 1/2" = 1'-0"

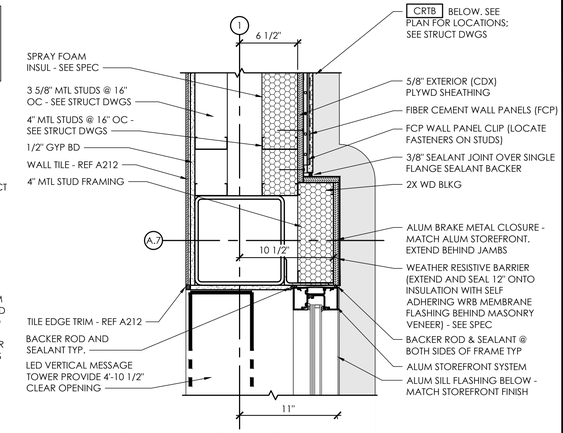

A3 Exterior Plan Detail - Vertical Message Tower

SCALE: 1 1/2" = 1'-0"

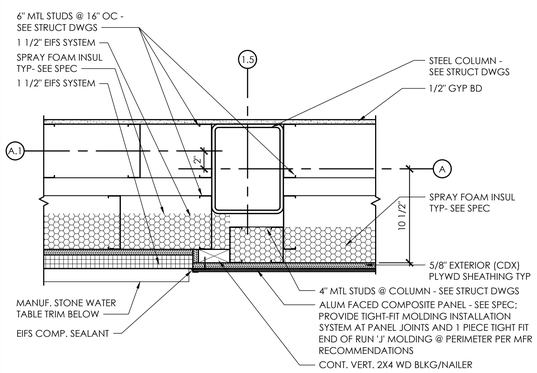

D2 Exterior Plan Detail - Outside Corner at ACP

SCALE: 1 1/2" = 1'-0"

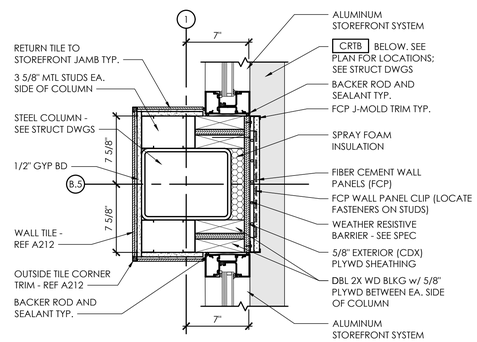

C2 Exterior Plan Detail - Glazing Column Wrap

SCALE: 1 1/2" = 1'-0"

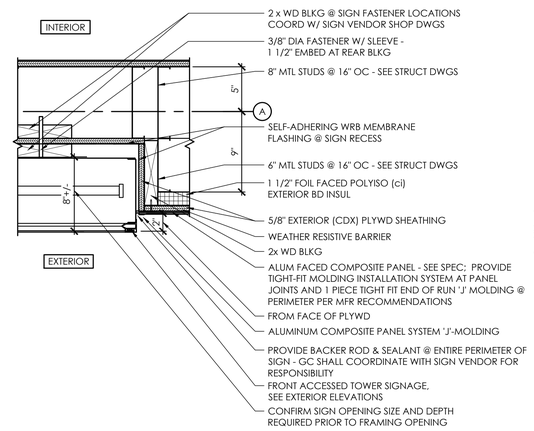

B2 Exterior Plan Detail - Logo Sign Attachment

SCALE: 1 1/2" = 1'-0"

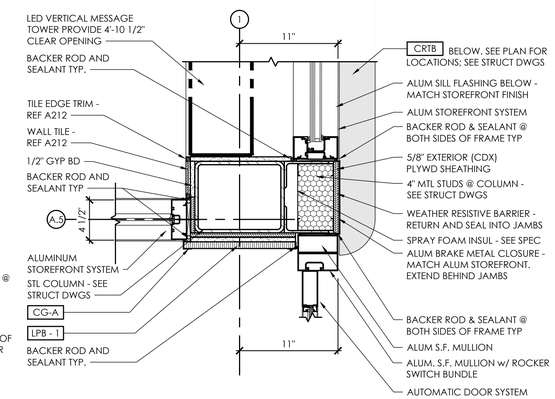

A2 Exterior Plan Detail - Vertical Message Tower

SCALE: 1 1/2" = 1'-0"

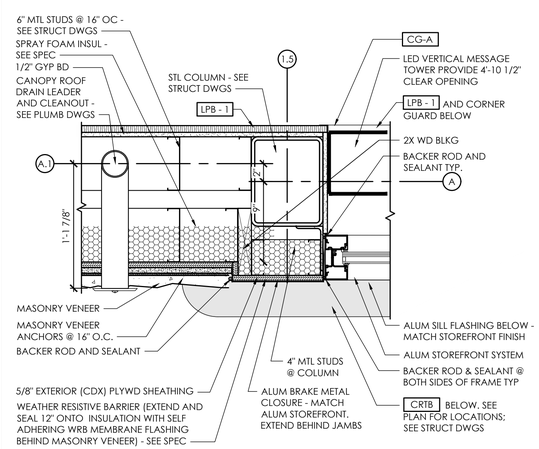

D1 Exterior Plan Detail - Vertical Message Tower

SCALE: 1 1/2" = 1'-0"

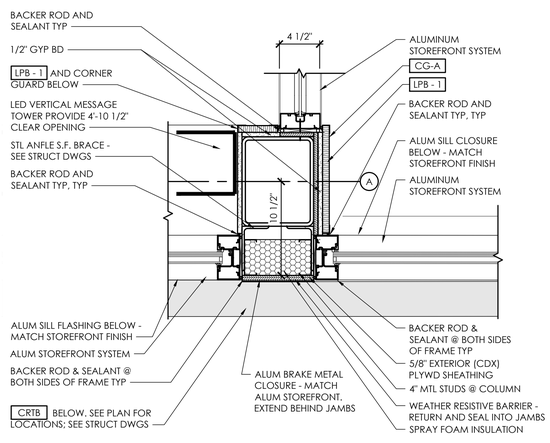

C1 Exterior Plan Detail - Vertical Message Tower

SCALE: 1 1/2" = 1'-0"

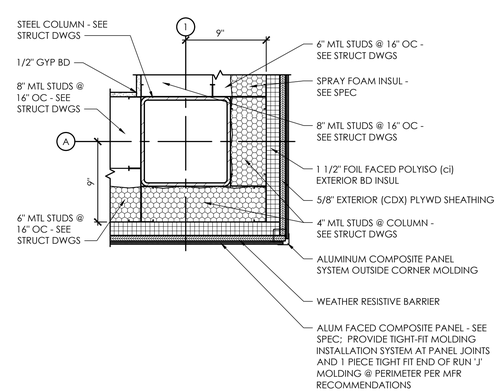

B1 Exterior Plan Detail - Outside Corner at Alum Comp Panel

SCALE: 1 1/2" = 1'-0"

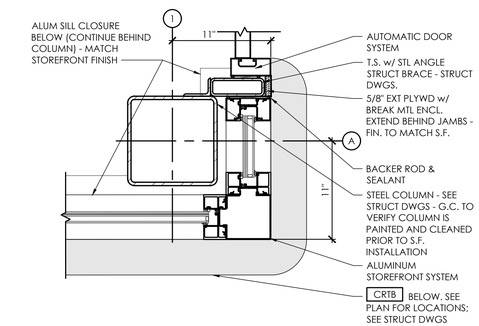

A1 Exterior Plan Detail - Storefront Corner at Vestibule

SCALE: 1 1/2" = 1'-0"

D | C | B | A

PLOTTED: 7/29/2025 9:47 AM

APD ENGINEERING ARCHITECTURE
615 Fishers Run Victor, NY 14564
585.742.2222 - www.apd.com

Copyright © 2024
APD Engineering & Architecture
615 Fishers Run
Victor, NY 14564

Drawing Alteration

It is a violation of law for any person, unless acting under the direction of licensed Architect, Professional Engineer, Landscape Architect, or Land Surveyor to alter any item on this document in any way. Any licensee who alters this document is required by law to affix his or her seal and to add the notation "Altered By" followed by his or her signature and the specific description of the alteration or revision.

DO NOT SCALE PLANS

Copying, Printing, Software and other processes required to produce these prints can stretch or shrink the actual paper or layout. Therefore, scaling of this drawing may be inaccurate. Contact APD E&A with any need for additional dimensions or clarifications.

Issued:		Date:
A	Issued for Permit	07/08/24
B	Issued for Bid	07/29/25
C		
D		
E		

Revisions:		Date:
1	Owner Changes	11/18/24
2	Owner Changes	07/29/25
3		
4		
5		
6		
7		
8		
9		
10		
11		
12		

PROJECT ARCHITECT/ENGINEER
Daniel Sargent

PROJECT LEAD
John Lynch

NOT FOR CONSTRUCTION

Seal | Seal

ALDI Inc.
1171 North State Road 7
Royal Palm Beach, FL 33411
(561) 640-8000

ALDI Inc. Store #: 50
Coconut Crossing, FL
12850 Northlake Boulevard
Palm Beach Gardens, FL 33412
Palm Beach County
Project Name & Location:

Exterior Details
Drawing Name:

Prototype: V7.08 LHRD	Project No. 22-0267A
Type: GROUND UP	
Drawn By: JAH	A-505
Scale: As Noted	Drawing No.

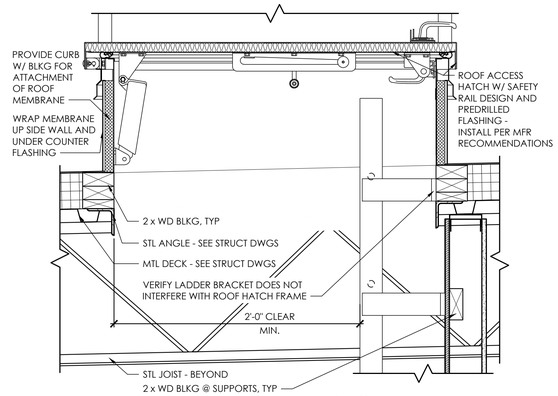

C3 Exterior Section Detail - Roof Hatch

SCALE: 1 1/2" = 1'-0"

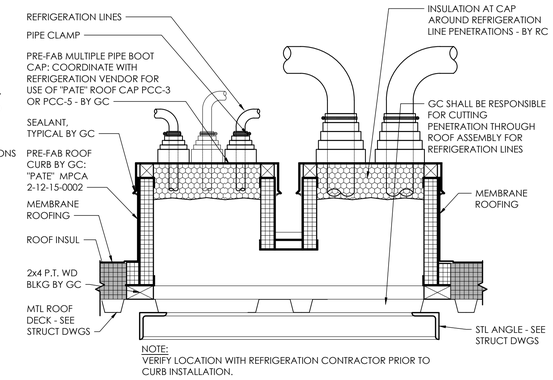

B3 Exterior Section Detail - Multiple Pipe Boot Curb

SCALE: 1 1/2" = 1'-0"

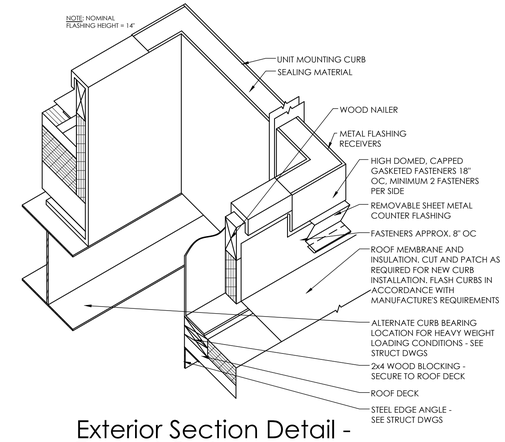

A3 Exterior Section Detail - Typical Curb

SCALE: 1" = 1'-0"

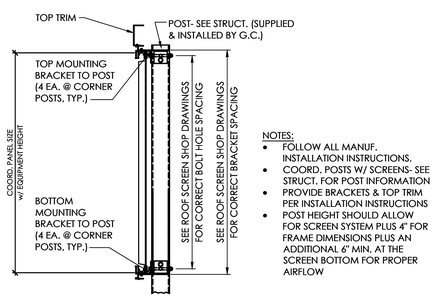

NOTES:

- FOLLOW ALL MANUF. INSTALLATION INSTRUCTIONS.
- COORD. POSTS W/ SCREENS- SEE STRUCT. FOR POST INFORMATION
- PROVIDE BRACKETS & TOP TRIM PER INSTALLATION INSTRUCTIONS
- POST HEIGHT SHOULD ALLOW FOR SCREEN SYSTEM PLUS 4" FOR FRAME DIMENSIONS PLUS AN ADDITIONAL 6" MIN. AT THE SCREEN BOTTOM FOR PROPER AIRFLOW

D2 Exterior Section Detail - Screen Detail

SCALE: N.T.S.

NOTE:

- FOR FLASHING DETAIL, SEE MANUF. INSTALLATION INSTRUCTIONS FOR MEMBRANE TYPE (KEE FIBERTITE ADHERED SHOWN)
- SEE MANUF. INSTALLATION INSTRUCTIONS FOR EXACT DIMENSIONS OF LAPS FOR WELDS & FLASHING

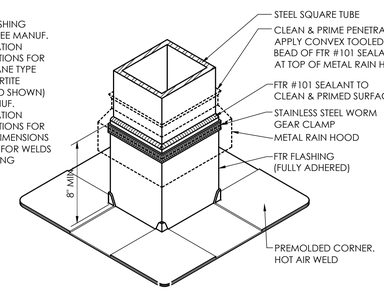

C2 Exterior Section Detail - Typical Tube Flashing Detail

SCALE: N.T.S.

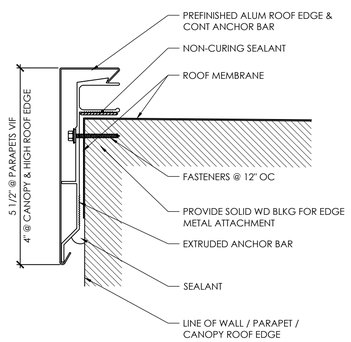

B2 Exterior Section Detail - Roof Edge Fascia and Anchor Bar

SCALE: 6" = 1'-0"

NOTES:

1. REFER TO SCHEDULES ON DRAWING A-603 FOR ALL FINISH AND INSULATION CALL-OUTS.
2. REFER TO RESPONSIBILITY SCHEDULES FOR ROOF SCOPE.

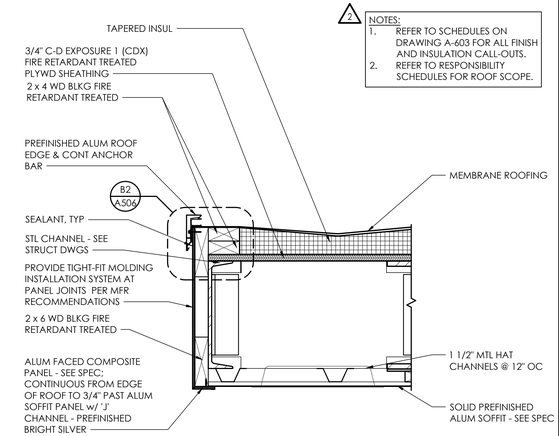

A2 Exterior Section Detail - Canopy Roof Edge

SCALE: 1 1/2" = 1'-0"

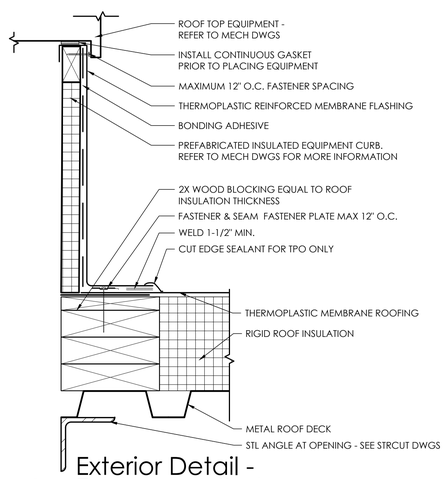

C1 Exterior Detail - Equipment Curb

SCALE: N.T.S.

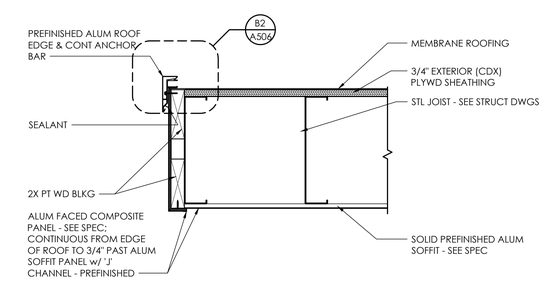

A1 Exterior Section Detail - High Roof Edge

SCALE: 1 1/2" = 1'-0"

PLOTTED: 7/29/2025 9:48 AM

D | C | B | A

APD ENGINEERING ARCHITECTURE
615 Fishers Run Victor, NY 14564
585.742.2222 - www.apd.com

Copyright © 2024
APD Engineering & Architecture
615 Fishers Run
Victor, NY 14564

Drawing Alteration

It is a violation of law for any person, unless acting under the direction of licensed Architect, Professional Engineer, Landscape Architect, or Land Surveyor to alter any item on this document in any way. Any licensee who alters this document is required by law to affix his or her seal and to add the notation "Altered By" followed by his or her signature and the specific description of the alteration or revision.

DO NOT SCALE PLANS

Copying, Printing, Software and other processes required to produce these prints can stretch or shrink the actual paper or layout. Therefore, scaling of this drawing may be inaccurate. Contact APD E&A with any need for additional dimensions or clarifications.

Issued:		Date:
A	Issued for Permit	07/08/24
B	Issued for Bid	07/29/25
C		
D		
E		

Revisions:		Date:
1	Owner Changes	11/18/24
2	Owner Changes	07/29/25
3		
4		
5		
6		
7		
8		
9		
10		
11		
12		

PROJECT ARCHITECT/ENGINEER
Daniel Sargent

PROJECT LEAD
John Lynch

NOT FOR CONSTRUCTION

Seal | Seal

ALDI Inc.
1171 North State Road 7
Royal Palm Beach, FL 33411
(561) 640-8000

ALDI Inc. Store #: 50
Coconut Crossing, FL
12850 Northlake Boulevard
Palm Beach Gardens, FL 33412
Palm Beach County
Project Name & Location:

Exterior Details
Drawing Name:

Prototype: V7.08 LHRD
Type: GROUND UP
Drawn By: JAH
Scale: As Noted

Project No. 22-0267A

Drawing No. A-506

NOTES:
1. REFER TO SCHEDULES ON DRAWING A-603 FOR ALL FINISH AND INSULATION CALL-OUTS.
2. REFER TO RESPONSIBILITY SCHEDULES FOR ROOF SCOPE.

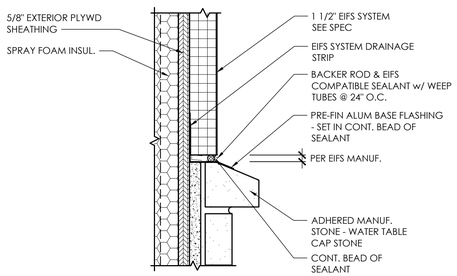

D3 Exterior Detail - Water Table

SCALE: 3" = 1'-0"

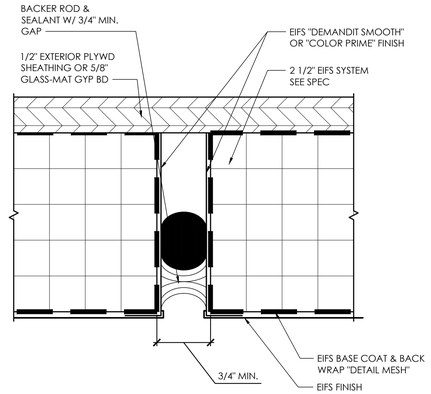

C3 Exterior Detail - EIFS Expansion Joint

SCALE: 1'-0" = 1'-0"

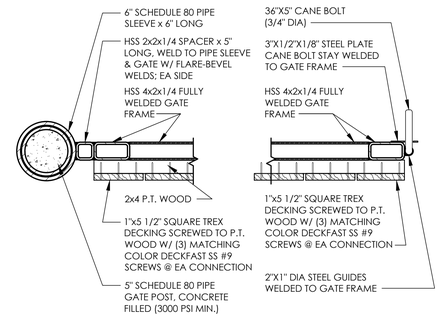

B3 Exterior Detail - Dumpster Gate

SCALE: 1 1/2" = 1'-0"

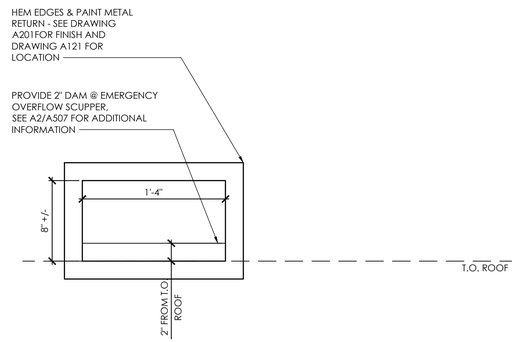

A3 Exterior Detail - Roof Scupper

SCALE: 1 1/2" = 1'-0"

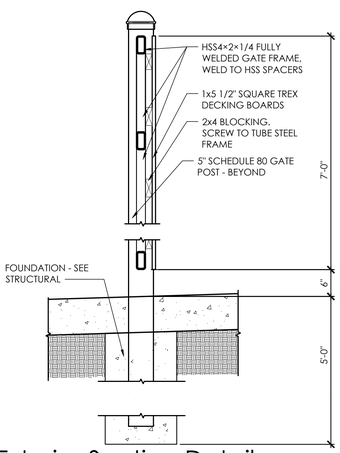

D2 Exterior Section Detail - Dumpster Post

SCALE: 3/4" = 1'-0"

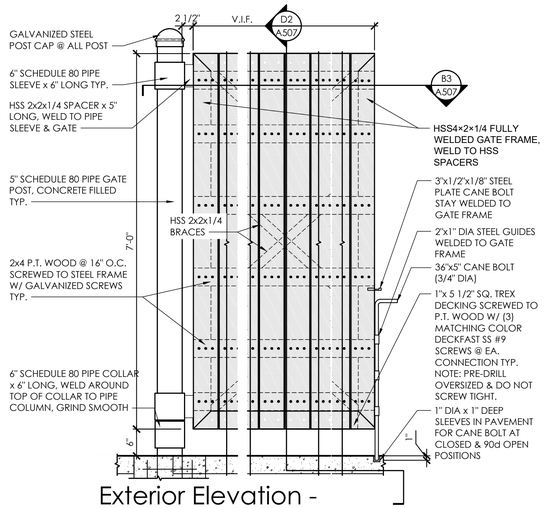

C2 Exterior Elevation - Dumpster Gate

SCALE: 3/4" = 1'-0"

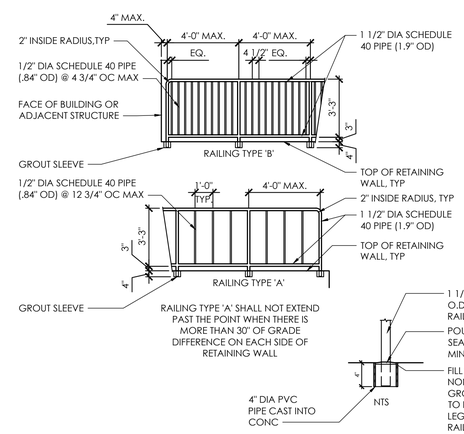

B2 Exterior Detail - Railing Types

SCALE: 1/4" = 1'-0"

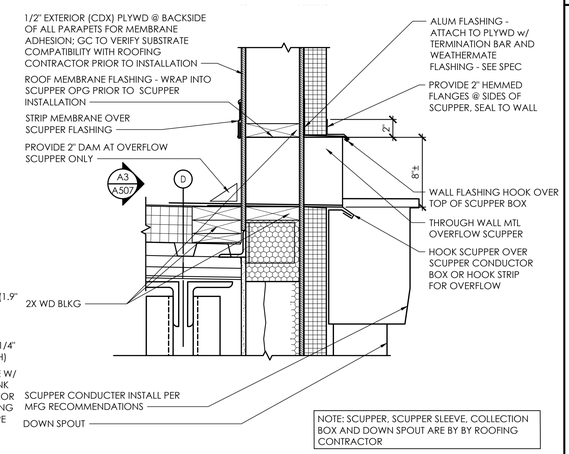

NOTE: SCUPPER, SCUPPER SLEEVE, COLLECTION BOX AND DOWN SPOUT ARE BY BY ROOFING CONTRACTOR

A2 Exterior Section Detail - Parapet at Scupper

SCALE: 1 1/2" = 1'-0"

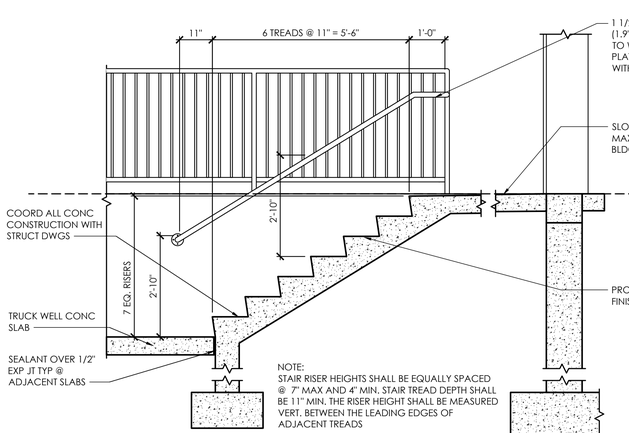

D1 Exterior Section Detail - Loading Dock Stairs

SCALE: 1/2" = 1'-0"

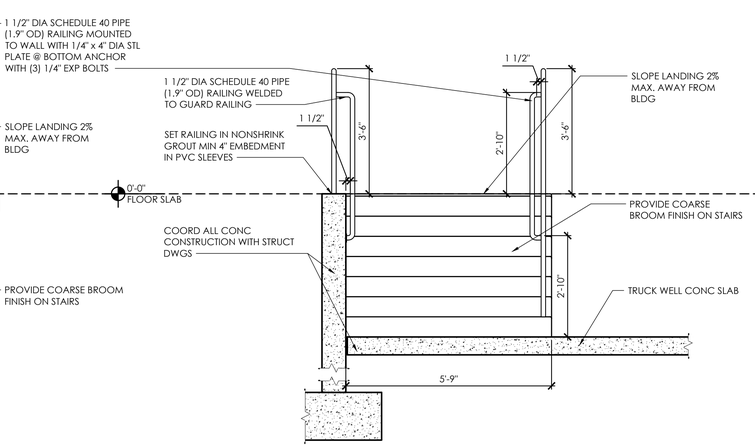

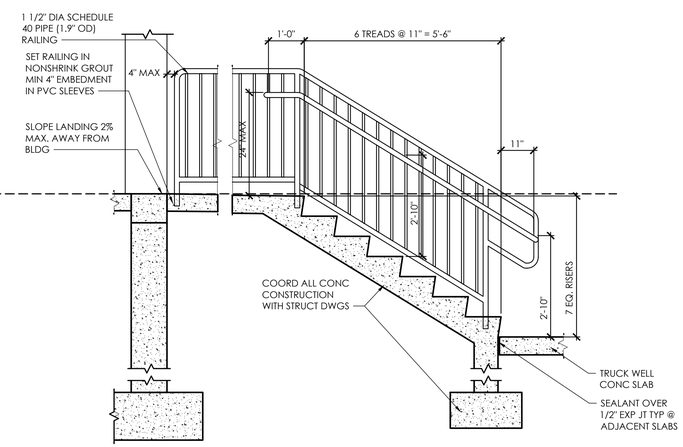

D | C | B | A

PLOTTED: 7/29/2025 9:48 AM

APD ENGINEERING ARCHITECTURE
615 Fishers Run Victor, NY 14564
585.742.2222 - www.apd.com

Copyright © 2024
APD Engineering & Architecture
615 Fishers Run
Victor, NY 14564

Drawing Alteration

It is a violation of law for any person, unless acting under the direction of licensed Architect, Professional Engineer, Landscape Architect, or Land Surveyor to alter any item on this document in any way. Any licensee who alters this document is required by law to affix his or her seal and to add the notation "Altered By" followed by his or her signature and the specific description of the alteration or revision.

DO NOT SCALE PLANS

Copying, Printing, Software and other processes required to produce these prints can stretch or shrink the actual paper or layout. Therefore, scaling of this drawing may be inaccurate. Contact APD E&A with any need for additional dimensions or clarifications.

3

Issued:		Date:
A	Issued for Permit	07/08/24
B	Issued for Bid	07/29/25
C		
D		
E		

2

Revisions:		Date:
1	Owner Changes	11/18/24
2	Owner Changes	07/29/25
3		
4		
5		
6		
7		
8		
9		
10		
11		
12		

PROJECT ARCHITECT/ENGINEER
Daniel Sargent

PROJECT LEAD
John Lynch

NOT FOR CONSTRUCTION

Seal | Seal

ALDI Inc.
1171 North State Road 7
Royal Palm Beach, FL 33411
(561) 640-8000

ALDI Inc. Store #: 50
Coconut Crossing, FL △1
12850 Northlake Boulevard
Palm Beach Gardens, FL 33412
Palm Beach County

1

Project Name & Location:

Exterior Details
Drawing Name:

Prototype: V7.08 LHRD	Project No.
Type: GROUND UP	22-0267A
Drawn By: JAH	A-507
Scale: As Noted	Drawing No.

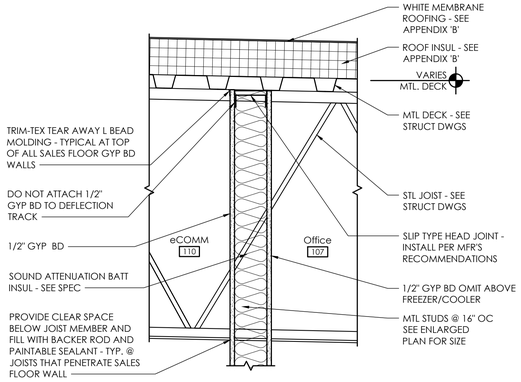

D3 Interior Section Detail - Interior Wall Head at Office

SCALE: 1 1/2" = 1'-0"

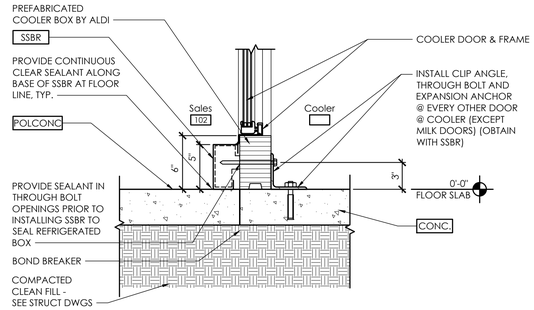

C3 Interior Section Detail - Cooler at General Doors

SCALE: 1 1/2" = 1'-0"

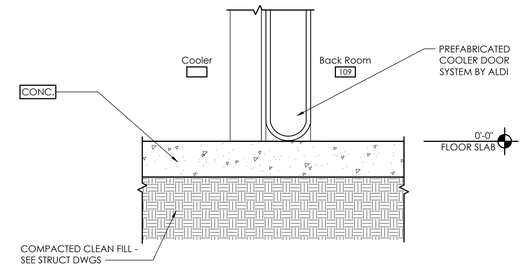

B3 Interior Section Detail - Cooler at Service Door

SCALE: 1 1/2" = 1'-0"

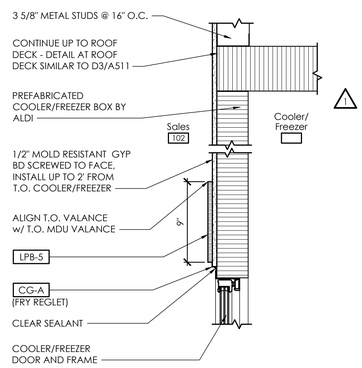

C2 Interior Section Detail - T.O. Cooler/Freezer at Sales

SCALE: 1 1/2" = 1'-0"

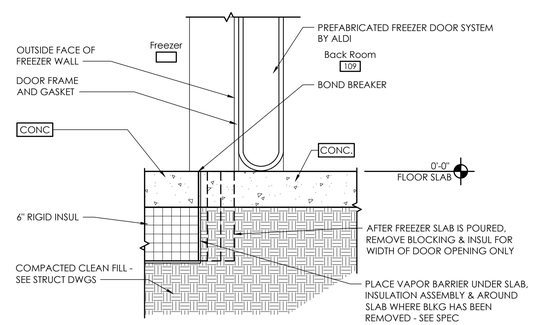

B2 Interior Section Detail - Freezer at Service Door

SCALE: 1 1/2" = 1'-0"

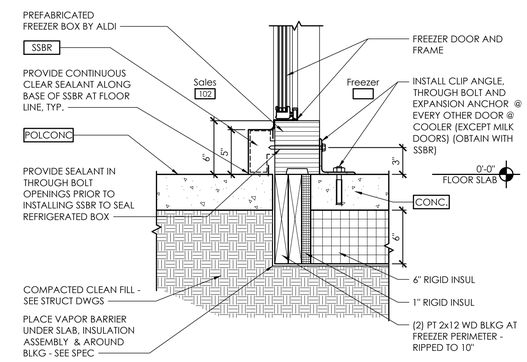

A2 Interior Section Detail - Freezer at General Doors

SCALE: 1 1/2" = 1'-0"

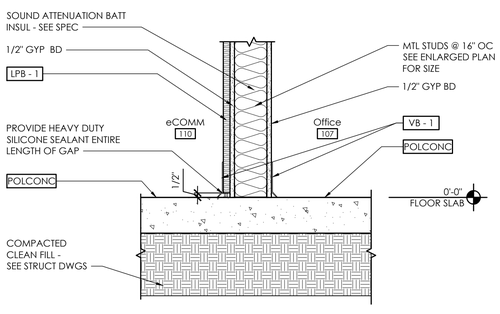

D1 Interior Section Detail - Wall Base at Office

SCALE: 1 1/2" = 1'-0"

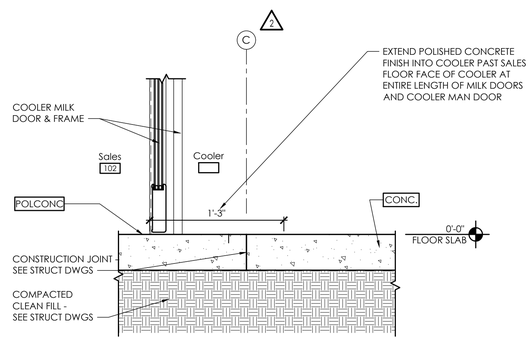

C1 Interior Section Detail - Cooler at Milk Doors

SCALE: 1 1/2" = 1'-0"

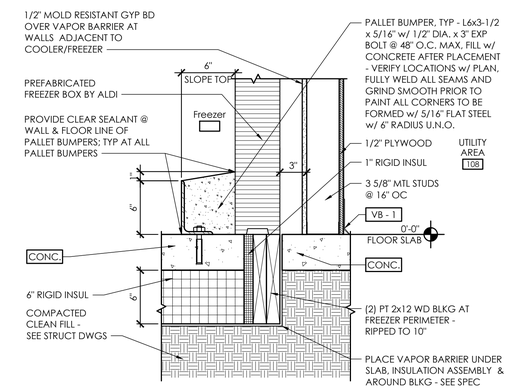

B1 Interior Section Detail - Freezer at Utility Area

SCALE: 1 1/2" = 1'-0"

D | C | B | A

APD ENGINEERING ARCHITECTURE
615 Fishers Run Victor, NY 14564
585.742.2222 - www.apd.com

Copyright © 2024
APD Engineering & Architecture
615 Fishers Run
Victor, NY 14564

Drawing Alteration

It is a violation of law for any person, unless acting under the direction of licensed Architect, Professional Engineer, Landscape Architect, or Land Surveyor to alter any item on this document in any way. Any licensee who alters this document is required by law to affix his or her seal and to add the notation "Altered By" followed by his or her signature and the specific description of the alteration or revision.

DO NOT SCALE PLANS

Copying, Printing, Software and other processes required to produce these prints can stretch or shrink the actual paper or layout. Therefore, scaling of this drawing may be inaccurate. Contact APD E&A with any need for additional dimensions or clarifications.

Issued:		Date:
A	Issued for Permit	07/08/24
B	Issued for Bid	07/29/25
C		
D		
E		

Revisions:		Date:
1	Owner Changes	11/18/24
2	Owner Changes	07/29/25
3		
4		
5		
6		
7		
8		
9		
10		
11		
12		

PROJECT ARCHITECT/ENGINEER
Daniel Sargent

PROJECT LEAD
John Lynch

NOT FOR CONSTRUCTION

Seal | Seal

ALDI Inc.
1171 North State Road 7
Royal Palm Beach, FL 33411
(561) 640-8000

ALDI Inc. Store #: 50
Coconut Crossing, FL △1
12850 Northlake Boulevard
Palm Beach Gardens, FL 33412
Palm Beach County
Project Name & Location:

Interior Details
Drawing Name:

Prototype: V7.08 LHRD	Project No. 22-0267A
Type: GROUND UP	
Drawn By: JWL	A-511
Scale: As Noted	Drawing No.

PLOTTED: 7/29/2025 9:48 AM

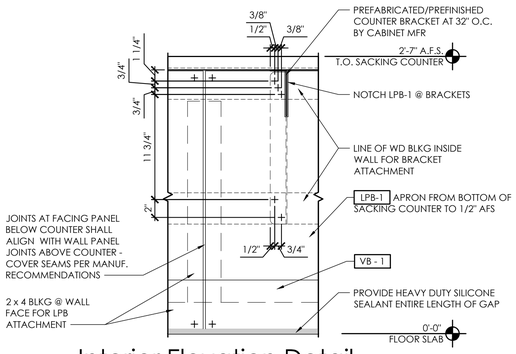

Interior Elevation Detail - Sacking Counter

D3

SCALE: 1 1/2" = 1'-0"

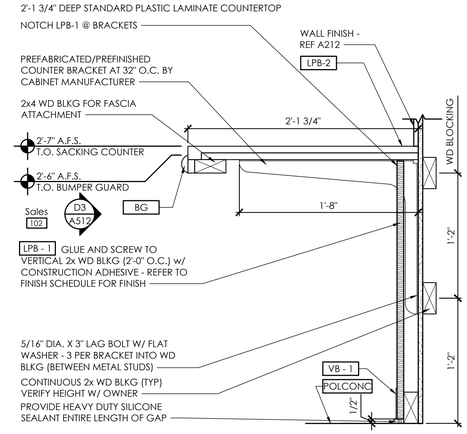

Interior Section Detail - Sacking Counter

C3

SCALE: 1 1/2" = 1'-0"

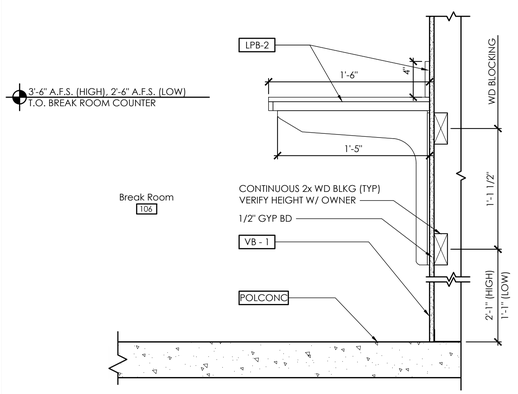

Interior Section Detail - Break Room High Top Counter

D2

SCALE: 1 1/2" = 1'-0"

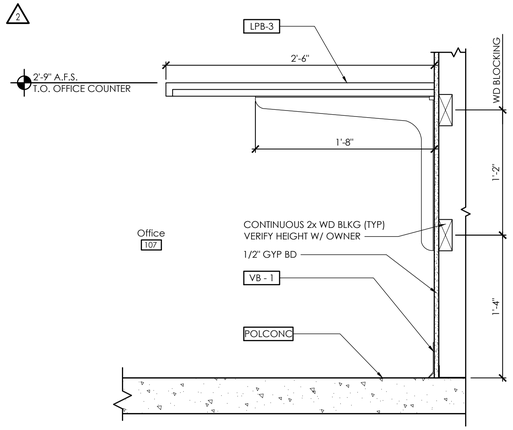

Interior Section Detail - Office Counter

C2

SCALE: 1 1/2" = 1'-0"

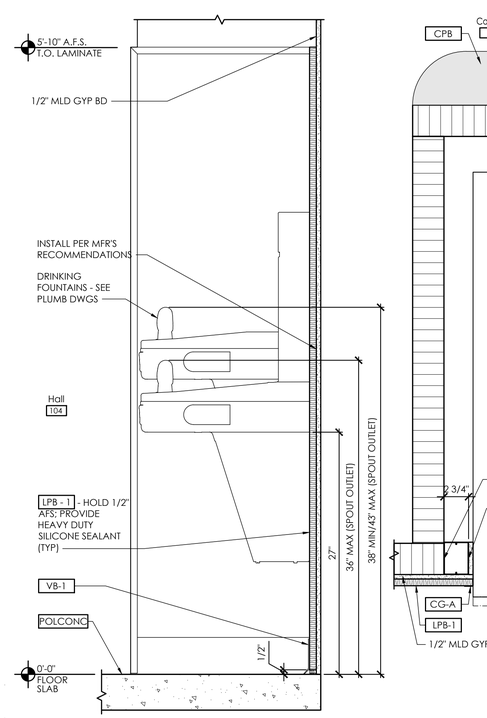

Interior Section Detail - Drinking Fountain

B2

SCALE: 1 1/2" = 1'-0"

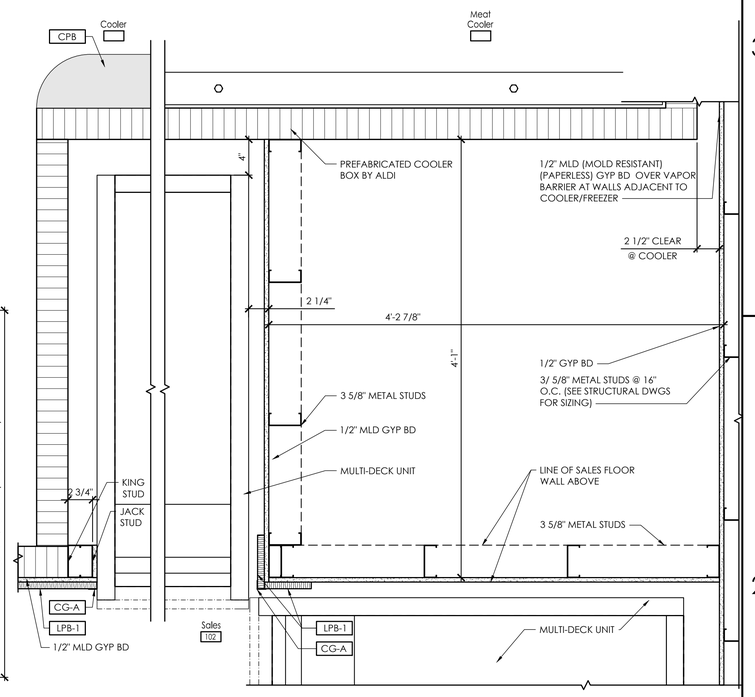

Interior Plan Detail - MDU and Cooler Alcove

A2

SCALE: 1 1/2" = 1'-0"

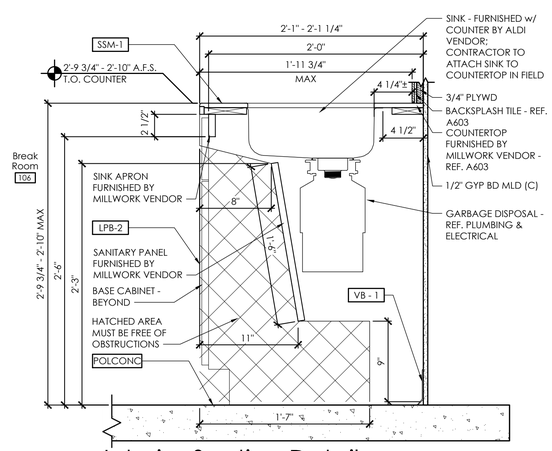

Interior Section Detail - Break Room Sink Cabinet

C1

SCALE: 1 1/2" = 1'-0"

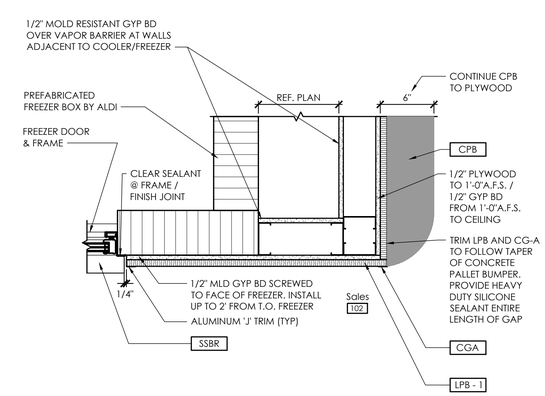

Interior Plan Detail - Wall Near Impact Doors

A1

SCALE: 1 1/2" = 1'-0"

PLOTTED: 7/29/2025 9:48 AM

D | C | B | A

APD ENGINEERING ARCHITECTURE
615 Fishers Run Victor, NY 14564
585.742.2222 - www.apd.com

Copyright © 2024
APD Engineering & Architecture
615 Fishers Run
Victor, NY 14564

Drawing Alteration

It is a violation of law for any person, unless acting under the direction of licensed Architect, Professional Engineer, Landscape Architect, or Land Surveyor to alter any item on this document in any way. Any licensee who alters this document is required by law to affix his or her seal and to add the notation "Altered By" followed by his or her signature and the specific description of the alteration or revision.

DO NOT SCALE PLANS

Copying, Printing, Software and other processes required to produce these prints can stretch or shrink the actual paper or layout. Therefore, scaling of this drawing may be inaccurate. Contact APD E&A with any need for additional dimensions or clarifications.

Issued:		Date:
A	Issued for Permit	07/08/24
B	Issued for Bid	07/29/25
C		
D		
E		

Revisions:		Date:
1	Owner Changes	11/18/24
2	Owner Changes	07/29/25
3		
4		
5		
6		
7		
8		
9		
10		
11		
12		

PROJECT ARCHITECT/ENGINEER
Daniel Sargent

PROJECT LEAD
John Lynch

NOT FOR CONSTRUCTION

Seal | Seal

ALDI Inc.
1171 North State Road 7
Royal Palm Beach, FL 33411
(561) 640-8000

ALDI Inc. Store #: 50
Coconut Crossing, FL
12850 Northlake Boulevard
Palm Beach Gardens, FL 33412
Palm Beach County

Project Name & Location:

Interior Details

Drawing Name:

Prototype: V7.08 LHRD	Project No. 22-0267A
Type: GROUND UP	
Drawn By: JWL	A-512
Scale: As Noted	Drawing No.

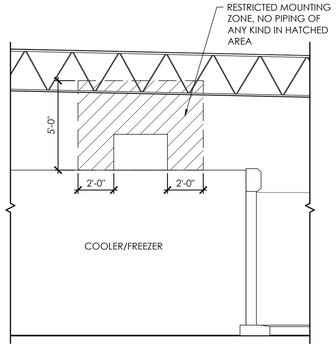

C3 Interior Elevation Detail - Monoblock Clearance

SCALE: 1/4" = 1'-0"

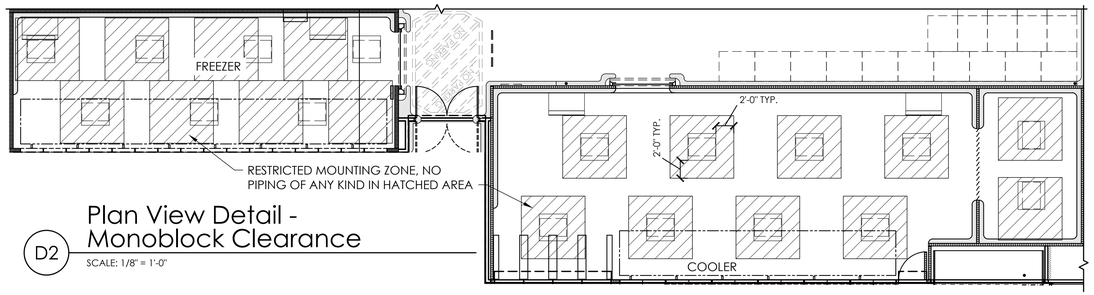

D2 Plan View Detail - Monoblock Clearance

SCALE: 1/8" = 1'-0"

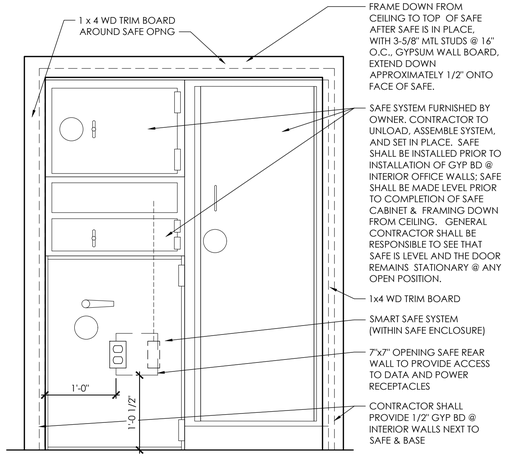

B2 Interior Elevation Detail - Office Safe

SCALE: 1" = 1'-0"

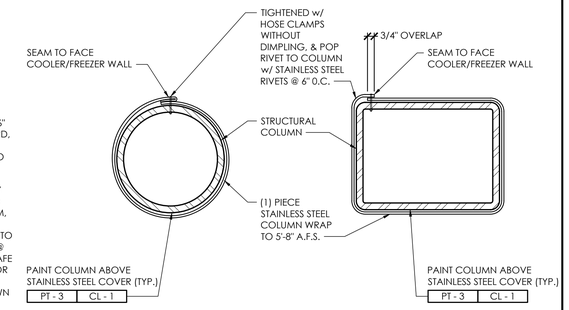

A3 Interior Plan Detail - Sales Area Column Wrap

SCALE: 1 1/2" = 1'-0"

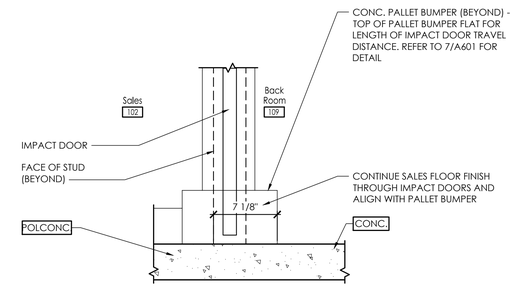

A2 Interior Section Detail - Slab at Impact Door

SCALE: 1 1/2" = 1'-0"

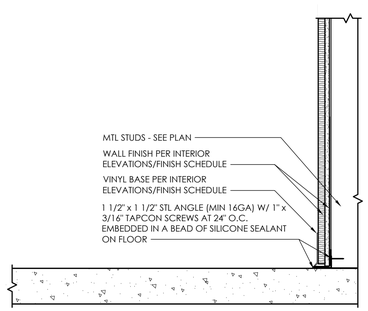

D1 Interior Section Detail - Pest Control at Sales Exterior Walls

SCALE: 1 1/2" = 1'-0"

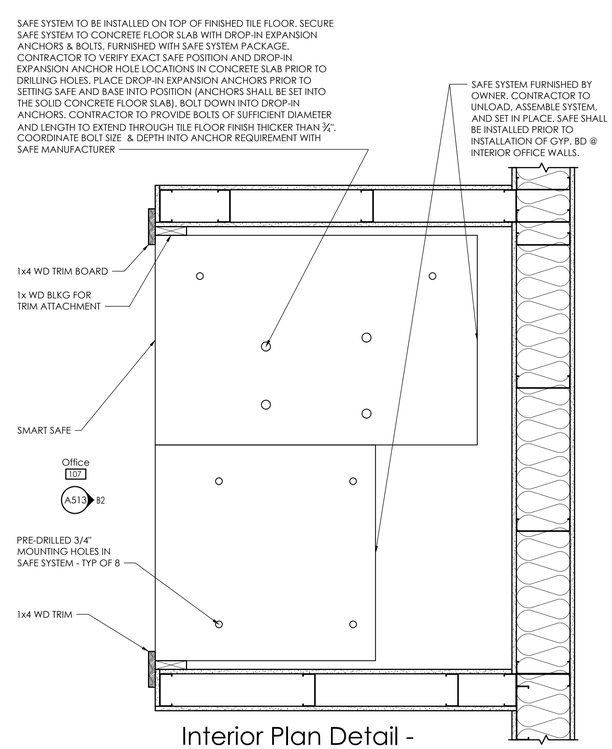

B1 Interior Plan Detail - Office Safe

SCALE: 1 1/2" = 1'-0"

PLOTTED: 7/29/2025 9:48 AM

D | C | B | A

APD ENGINEERING ARCHITECTURE
615 Fishers Run Victor, NY 14564
585.742.2222 - www.apd.com

Copyright © 2024
APD Engineering & Architecture
615 Fishers Run
Victor, NY 14564

Drawing Alteration

It is a violation of law for any person, unless acting under the direction of licensed Architect, Professional Engineer, Landscape Architect, or Land Surveyor to alter any item on this document in any way. Any licensee who alters this document is required by law to affix his or her seal and to add the notation "Altered By" followed by his or her signature and the specific description of the alteration or revision.

DO NOT SCALE PLANS

Copying, Printing, Software and other processes required to produce these prints can stretch or shrink the actual paper or layout. Therefore, scaling of this drawing may be inaccurate. Contact APD E&A with any need for additional dimensions or clarifications.

	Issued:	Date:
A	Issued for Permit	07/08/24
B	Issued for Bid	07/29/25
C		
D		
E		

	Revisions:	Date:
1	Owner Changes	11/18/24
2	Owner Changes	07/29/25
3		
4		
5		
6		
7		
8		
9		
10		
11		
12		

PROJECT ARCHITECT/ENGINEER
Daniel Sargent

PROJECT LEAD
John Lynch

NOT FOR CONSTRUCTION

Seal | Seal

ALDI Inc.
1171 North State Road 7
Royal Palm Beach, FL 33411
(561) 640-8000

ALDI Inc. Store #: 50
Coconut Crossing, FL 1
12850 Northlake Boulevard
Palm Beach Gardens, FL 33412
Palm Beach County

Project Name & Location:

Interior Details

Drawing Name:

Prototype: V7.08 LHRD

Type: GROUND UP

Drawn By: JWL

Scale: As Noted

Project No. 22-0267A

A-513

Drawing No.

DOOR SCHEDULE

DOOR NO.	DOOR SIZE WIDTH	DOOR SIZE HEIGHT	DOOR THICK.	DOOR ELEV.	DOOR MAT.	DOOR FIN.	DOOR FIRE LABEL	FRAME ELEV.	FRAME MAT.	FRAME FIN.	FRAME FIRE LABEL	HDW. GROUP	DETAIL HEAD	DETAIL JAMB	DETAIL SILL	REMARK	DOOR NO.	ROOM NAME
101A	+/- 16'-0" V.I.F. 6'-6 1/4" CLEAR EXIT WIDTH	7'-6" V.I.F.	3 --	DD	ALUM.	--	--	--	ALUM.	--	--	100	D3/A502	--	D1/A501	DOOR ELEVATIONS ON THIS SHEET. SEE SHEET A505 FOR JAMB DETAILS - FIXED SIDELIGHT PANEL SHALL MAKE UP DIFFERENCE IN MASONRY OPENING: DOOR 101A WILL HAVE 1/2" RECESSED THRESHOLD.	101A	VESTIBULE
101B	+/- 8'-2" V.I.F. 3'-6 1/4" CLEAR EXIT WIDTH	8'-2" V.I.F.	--	EE	ALUM.	--	--	--	ALUM.	--	--	100	D1/A302	--	D1/A501 SIM		101B	VESTIBULE
101C	+/- 8'-2" V.I.F. 3'-6 1/4" CLEAR EXIT WIDTH	8'-2" V.I.F.	--	EE	ALUM.	--	--	--	ALUM.	--	--	100	D1/A302	--	D1/A501 SIM		101C	VESTIBULE
102A	7'-0"	8'-0"	1 1/2"	CC	POLY	--	--	D	H.M.	1	--	SEE REMARK	6/A601	7/A601	A2/A513	DOOR & HARDWARE PROVIDED BY GC; KNOCK DOWN FRAME FURNISHED BY OWNER AND INSTALLED BY G.C. VISION PANEL SHALL COMPLY WITH THE PROPERTIES OF CATEGORY II SAFETY GLAZING	102A	SALES
102B	4'-0"	7'-0"	1 3/4"	BB	H.M.	1/2	--	C	H.M.	1/2	--	500	1/A601	2/A601	3/A601	INSUL. EXT. DOOR - PREPARE DOOR FRAME FOR ALARMED EXIT DEVICE BEFORE GROUTING SOLID. DOOR FRAME TO CONTAIN CONDUIT AND ELECTRIFIED HINGE.	102B	SALES
103	3'-0"	7'-0"	1 3/4"	AA	H.M.	1	--	A	H.M.	1	--	200	4/A601	5/A601	--		103	UNISEX 1
105	3'-0"	7'-0"	1 3/4"	AA	H.M.	1	--	A	H.M.	1	--	200	4/A601	5/A601	--		105	UNISEX 2
106	3'-0"	7'-0"	1 3/4"	AA	H.M.	1	--	A	H.M.	1	--	401	4/A601	5/A601	--		106	BREAK ROOM
107	3'-0"	7'-0"	1 3/4"	AA	H.M.	1	--	A	H.M.	1	--	400	4/A601	5/A601	--	NOTE: FRAME TO BE 14 GAGE.	107	OFFICE
109A	3'-0"	7'-0"	1 3/4"	AA	H.M.	1/2	--	B	H.M.	1/2	--	600	1/A601	2/A601	3/A601	SEE REMARKS FOR 102B	109A	BACK ROOM
109B	8'-2"	8'-1"	--	FF	STL.	3/2	--	--	--	--	--	SEE REMARK	8/A601	9/A601	10/A601	HARDWARE FURNISHED WITH DOOR.	109B	BACK ROOM
110	4'-0"	7'-0"	1 3/4"	GG	H.M.	1/2	--	C	H.M.	1/2	3 --	700	13/A601	2/A601 SIM.	3/A601 SIM.	SEE REMARKS FOR 102B	3 110	eCOMMERCE
111	3'-0"	7'-0"	1 3/4"	AA	H.M.	1	--	A	H.M.	1	--	400	4/A601	5/A601			111	CLOSET

NOTE: ALL HOLLOW METAL DOORS, FRAMES AND HARDWARE ARE OWNER FURNISHED / CONTRACTOR INSTALLED. (UNLESS OTHER WISE NOTED) (PAINTING IS BY CONTRACTOR.)

LEGEND

ALUM.	ANODIZED ALUMINUM
H.M.	HOLLOW METAL
POLY	POLYETHYLENE
STL.	STEEL

NOTE:
SEE SHEET A603 FOR FINISH SCHEDULES
SEE SHEETS A212-A215 & E201 FOR POWER REQUIREMENTS & COMPONENT LOCATIONS AT DOORS 102B, 110 & 109A

DOOR HARDWARE

DOOR HARDWARE SET NO. **100**
DOOR NO. 101A, 101B, 101C; PROVIDED BY OWNER.

DOOR HARDWARE SET NO. **200**
DOOR NO. 103, 105; UNISEX 1 & UNISEX 2; EACH TO HAVE THE FOLLOWING:

No.	Item	Description	Manufacturer	Finish
3	HINGES	5BB1	IVE (IVS)	652
1	PRIVACY LOCK	ND40S	SCHLAGE (SCH)	626
1	CLOSER	1450 X RW/PA	LCN	AL
1	WALL STOP	WS406/407-CCV	IVE (IVS)	AL
1	42" H. PROTECTIVE PLATE	K1050 X 4BE	ROCKWOOD (ROC)	630

DOOR HARDWARE SET NO. **400**
DOOR NO. 107, 111; OFFICE AND CLOSET TO HAVE THE FOLLOWING:

No.	Item	Description	Manufacturer	Finish
3	HINGES	5BB1-NRP	IVE (IVS)	652
1	STOREROOM LOCK	L9480 BD 06A	SCHLAGE (SCH)	626
1	CLOSER	1450 X RW/PA	LCN	AL
1	WALL STOP	WS406/407-CCV	IVE (IVS)	AL
1	DOOR VIEWER (OFFICE ONLY)	698	IVE (IVS)	-
1	48" H. PROTECTIVE PLATE (OFFICE ONLY)	K1050 X 4BE	ROCKWOOD (ROC)	630
	NOTE: FRAME TO BE 14 GAGE @ OFFICE ONLY.			

DOOR HARDWARE SET NO. **401**
DOOR NO. 106; BREAK ROOM TO HAVE THE FOLLOWING:

No.	Item	Description	Manufacturer	Finish
3	HINGES	5BB1-NRP	IVE (IVS)	652
1	PRIVACY LOCK	SCHLAGE L9485P 06A X L283-722 X 2 EMERGENCY KEYS	SCHLAGE (SCH)	626
1	CLOSER	1450 X RW/PA	LCN	AL
1	WALL STOP	WS406/407-CCV	IVE (IVS)	AL
1	DOOR VIEWER	698	IVE (IVS)	-
1	42" H. PROTECTIVE PLATE	K1050 X 4BE	ROCKWOOD (ROC)	630

DOOR HARDWARE SET NO. **500**
DOOR NO. 102B; EGRESS TO HAVE THE FOLLOWING:

No.	Item	Description	Manufacturer	Finish
2	HINGES	5BB1-NRP	IVE (IVS)	652
1	HINGE	TA2314-QC8	MCKINNEY (MCK)	US32D
1	THRESHOLD	65A	ZERO (ZER)	3 AL
1	EXIT/PANIC	7150WS-48 x EO x 757F	ASSA ABLOY ACCENTRA	628
1	REMOTE SOUNDER	CS-2940S	DETEX	GREY
1	CLOSER	1450 X RW/PA	LCN	AL
1	DRIP STRIP	142AA	ZERO (ZER)	CLEAR ANOD AL
1	STICK-ON GASKET	8144S-BK	ZERO (ZER)	-
1	DOOR SWEEP	8192AA	ZERO (ZER)	CLEAR ANOD AL
1	DOOR SHOE	153A	ZERO	AL
1	LATCH GUARD	320-RKW	ROCKWOOD	US32D/60

KEYNOTES - FINISHES (SEE A-603 COLOR/MATERIAL SCHEDULE)

1	PT-3 / CL-5	SEMIGLOSS - INTERIOR SIDE
2	PT-19 / CL-5	SEMIGLOSS - EXTERIOR SIDE
3	PREFINISHED	WHITE - INTERIOR SIDE

"BASIS-OF-DESIGN FOR AUTO SLIDING DOOR SYSTEMS(FURNISHED & INSTALLED BY ALDI DOOR SUPPLIER): DOOR 101A: STANLEY - STEEL REINFORCED IMPACT RATED - DURA-STORM SERIES 2000 (0-SX-SX-0)

DOORS 101B & 101C: STANLEY DURA-GLIDE SERIES 2000 (SX-0)

SLIDING DOOR SYSTEMS SHALL COMPLY WITH THE REQUIREMENTS OF 2023 FBC 1010.3.2

AUTO SLIDING DOOR SCOPE
DOOR 101A: AUTO DOOR SYSTEM AND DOOR GLASS ONLY FURNISHED & INSTALLED BY ALDI DOOR SUPPLIER. TRANSOM STOREFRONT FRAMING AND GLASS ABOVE FURNISHED & INSTALLED BY GC

DOORS 101B & 101C: AUTO DOOR SYSTEM FURNISHED & INSTALLED BY ALDI DOOR SUPPLIER. TRANSOM AND SIDE LIGHT CURTAIN WALL FRAMING AND GLASS PROVIDED BY GC

GC TO CONFIRM WITH OWNER THAT THE ALDI AUTO DOOR SUPPLIER VERIFIES THE R.O. PRIOR TO THE FABRICATION OF THE DOORS

DOOR HARDWARE (CONT.)

DOOR HARDWARE SET NO. **600**
DOOR NO. 109A; BACKROOM EGRESS TO HAVE THE FOLLOWING:

No.	Item	Description	Manufacturer	Finish
2	HINGES	5BB1-NRP	IVE (IVS)	652
1	HINGE	TA2314-QC8	MCKINNEY (MCK)	US 32D
1	THRESHOLD	65A	ZERO (ZER)	3 AL
1	EXIT/PANIC	7150WS-36 x 621F x 757F	ASSA ABLOY ACCENTRA	628
1	REMOTE SOUNDER	CS-2940S	DETEX	GREY
1	CLOSER W/ HOLD OPEN	1250 X HW/PA	LCN	AL
1	DRIP STRIP	142AA	ZERO (ZER)	CLEAR ANOD AL
1	STICK-ON GASKET	8144S-BK	ZERO (ZER)	-
1	DOOR SWEEP	8192AA	ZERO (ZER)	CLEAR ANOD AL
1	DOOR SHOE	153A	ZERO	AL
1	LATCH GUARD	320-RKW	ROCKWOOD	US32D/60

DOOR HARDWARE SET NO. **700**
DOOR NO. 110; EGRESS TO HAVE THE FOLLOWING:

No.	Item	Description	Manufacturer	Finish
3	HINGES	5BB1-NRP	IVE (IVS)	652
1	HINGE	TA2314-QC8	MCKINNEY (MCK)	US32D
1	CYLINDER	R28207-1 26D	SCHLAGE (SCH)	626
1	THRESHOLD	65A	ZERO (ZER)	3 AL
1	EXIT/PANIC	7150WS-48 x EO x 757F	ASSA ABLOY ACCENTRA	628
1	DRIP STRIP	142AA	ZERO (ZER)	CLEAR ANOD AL
1	STICK-ON GASKET	8144S-BK	ZERO (ZER)	-
1	DOOR SWEEP	8192AA	ZERO (ZER)	CLEAR ANOD AL
1	ELECTRONIC STRIKE	9600-12	HES	-
1	*DOOR OPERATOR	MAGIC FORCE	STANLEY	BZ
2	CARD READER	BY OTHERS		
	DOOR POSITION SWITCH	BY OTHERS		
	LOW VOLTAGE POWER SUPPLY	BY OTHERS		
1	32" H. PROTECTIVE PLATE	K1050 X 4BE	ROCKWOOD (ROC)	630
1	DOOR SHOE	153A	ZERO	AL
1	LATCH GUARD	320-RKW	ROCKWOOD	US32D/60

OPERATION:
EGRESS BY CARD READER INSIDE SHUTS DOOR POSITION SWITCH.
EGRESS WITHOUT CARD READER TRIGGERS ALARM.
ENTRANCE BY CARD ACTIVATES DOOR OPERATOR (CAN BE OPENED WITH KEY OVERRIDE).
*ALDI PROVIDED FURNISHED AND INSTALLED

1 NOTE:
ALL EXIT DOORS SHALL BE ARRANGED TO OPEN READILY FROM THE EGRESS SIDE WITHOUT THE USE OF A KEY, TOOL, OR SPECIAL KNOWLEDGE.

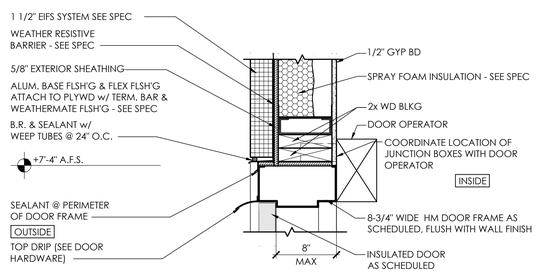

13 Head Detail
SCALE: 1 1/2" = 1'-0"

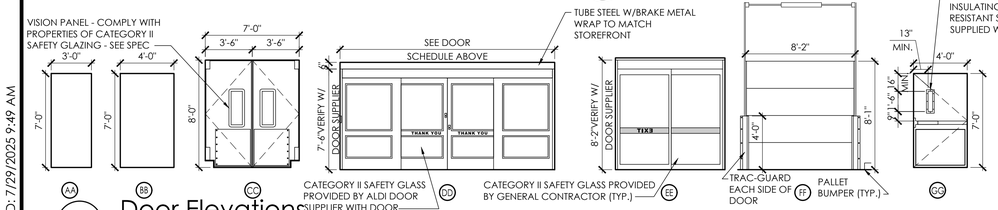

12 Door Elevations
SCALE: 3/16" = 1'-0"

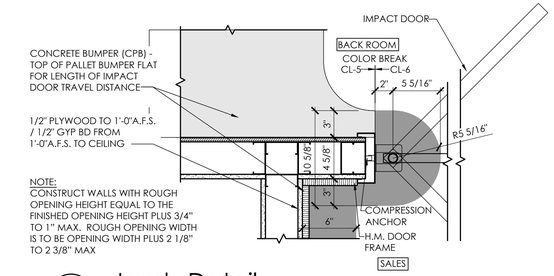

7 Jamb Detail
SCALE: 1 1/2" = 1'-0"

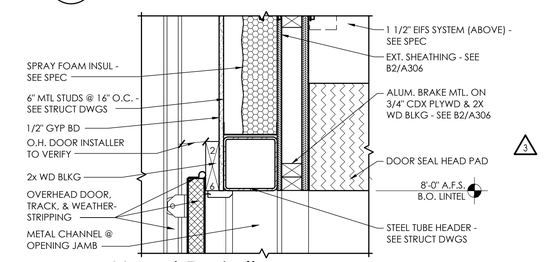

8 Head Detail
SCALE: 1 1/2" = 1'-0"

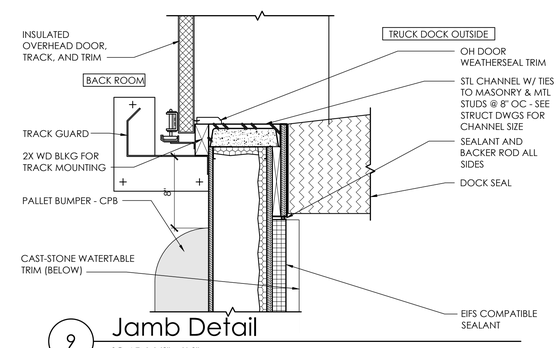

9 Jamb Detail
SCALE: 1 1/2" = 1'-0"

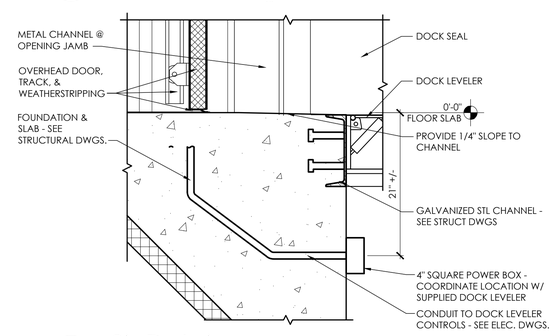

10 Sill Detail
SCALE: 1 1/2" = 1'-0"

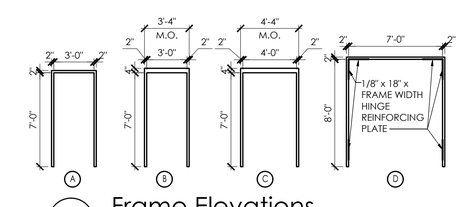

11 Frame Elevations
SCALE: 3/16" = 1'-0"

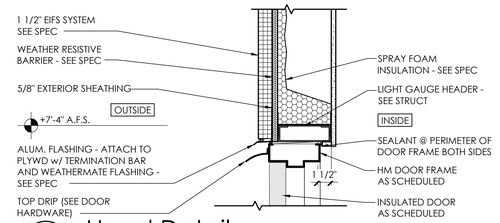

1 Head Detail
SCALE: 1 1/2" = 1'-0"

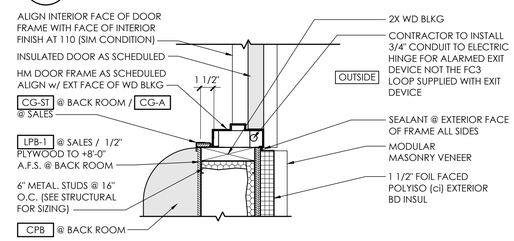

2 Jamb Detail
SCALE: 1 1/2" = 1'-0"

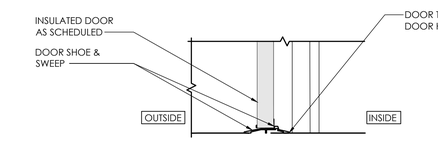

3 Sill Detail
SCALE: 1 1/2" = 1'-0"

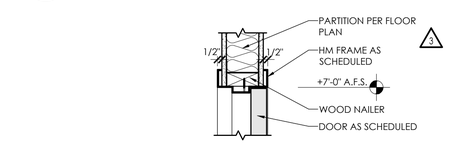

4 Head Detail
SCALE: 1 1/2" = 1'-0"

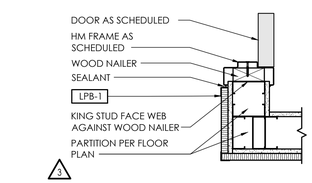

5 Jamb Detail
SCALE: 1 1/2" = 1'-0"

NOTE:
CONSTRUCT WALLS WITH ROUGH OPENING HEIGHT EQUAL TO THE FINISHED OPENING HEIGHT PLUS 3/4" TO 1" MAX. ROUGH OPENING WIDTH IS TO BE OPENING WIDTH PLUS 2 1/8" TO 2 3/8" MAX

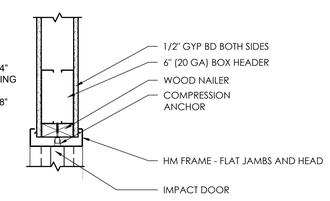

6 Head Detail
SCALE: 1 1/2" = 1'-0"

APD ENGINEERING ARCHITECTURE
615 Fishers Run Victor, NY 14564
585.742.2222 - www.apd.com

Copyright © 2024
APD Engineering & Architecture
615 Fishers Run
Victor, NY 14564

Drawing Alteration
It is a violation of law for any person, unless acting under the direction of licensed Architect, Professional Engineer, Landscape Architect, or Land Surveyor to alter any item on this document in any way. Any licensee who alters this document is required by law to affix his or her seal and to add the notation "Altered By" followed by his or her signature and the specific description of the alteration or revision.

DO NOT SCALE PLANS
Copying, Printing, Software and other processes required to produce these prints can stretch or shrink the actual paper or layout. Therefore, scaling of this drawing may be inaccurate. Contact APD E&A with any need for additional dimensions or clarifications.

Issued:		Date:
A	Issued for Permit	07/08/24
B	Issued for Bid	07/29/25
C		
D		
E		

Revisions:		Date:
1	AHJ Responses	10/02/24
2	Owner Changes	11/18/24
3	Owner Changes	07/29/25
4		
5		
6		
7		
8		
9		
10		
11		
12		

PROJECT ARCHITECT/ENGINEER
Daniel Sargent
PROJECT LEAD
John Lynch

NOT FOR CONSTRUCTION

Seal | Seal

ALDI Inc.
1171 North State Road 7
Royal Palm Beach, FL 33411
(561) 640-8000

ALDI Inc. Store #: 50
Coconut Crossing, FL 3
12850 Northlake Boulevard
Palm Beach Gardens, FL 33412
Palm Beach County
Project Name & Location:

Door Schedules & Details
Drawing Name:

Prototype: V7.08 LHRD	Project No. 22-0267A
Type: GROUND UP	
Drawn By: JWL	
Scale: As Noted	Drawing No. A-601

PLOTTED: 7/29/2025 9:49 AM

GLAZING SCHEDULE			
KEY	KEY DESCRIPTION	DESCRIPTION -COLOR	REMARKS
GL-1	LAMINATED SAFETY GLASS	CLEAR	SEE PROJECT MANUAL - SECTION 088000
GL-2	LOW E, INSULATING SAFETY GLASS	CLEAR	SEE PROJECT MANUAL - SECTION 088000
GL-3	LOW E, LAMINATED SAFETY GLASS	CLEAR	NOT BY GC. SUPPLIED BY AUTO DOOR VENDOR U.N.O. SEE PROJECT MANUAL SECION 088000

NOTE:
1. ALUMINUM FRAMING:
   -INTERIOR VESTIBULE: 2" X 4 1/2" CENTER SET STOREFRONT.
   -EXTERIOR STOREFRONT: 2 1/2" X 5" THERMAL CENTER SET.
2. SEE SPEC FOR GLASS TYPES
3. FIELD VERIFY ALL OPENING DIMENSIONS PRIOR TO ORDERING AND FABRICATION. 3
4. ALL MULLIONS TO BE EQUAL SPACED U.N.O.
5. ALL GLAZING IN STOREFRONT, WINDOW OPENINGS, DOORS, SIDELIGHTS, AND TRANSOMS SHALL BE LAMINATED CATEGORY II SAFETY GLASS.

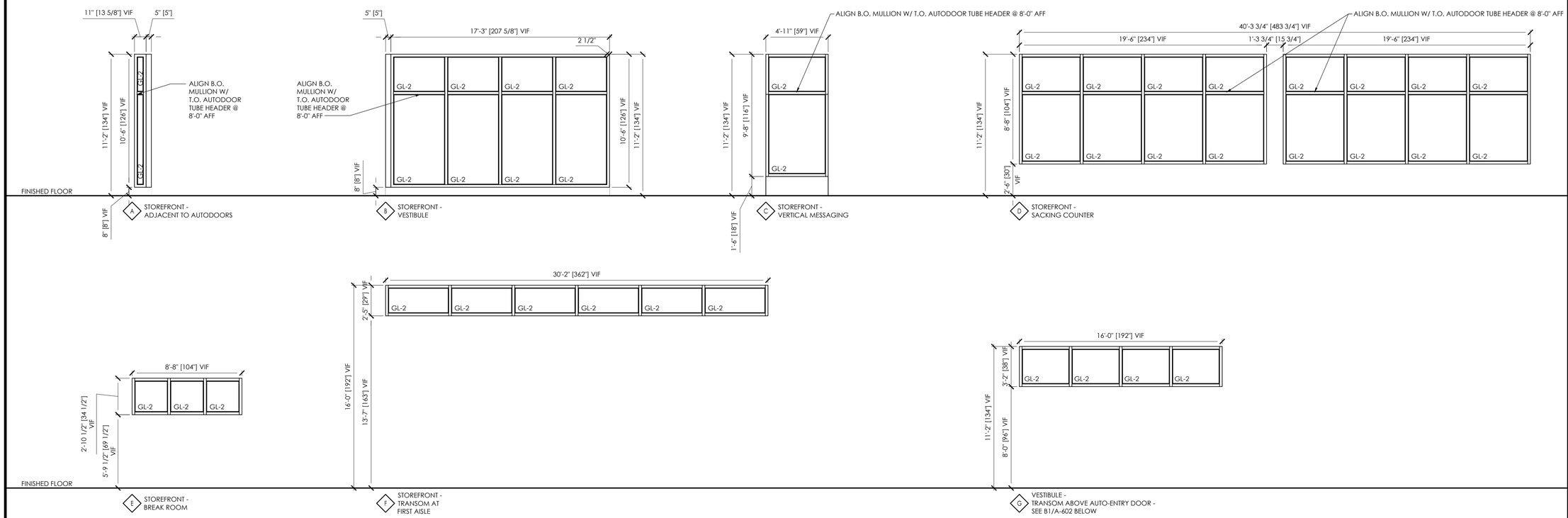

D3 Glazing Systems
SCALE: 1/4" = 1'-0"

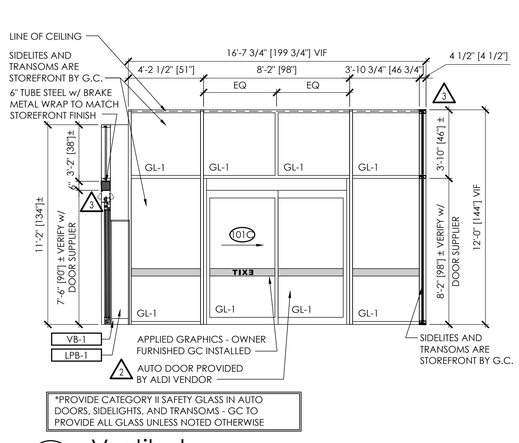

D1 Vestibule
SCALE: 1/4" = 1'-0"

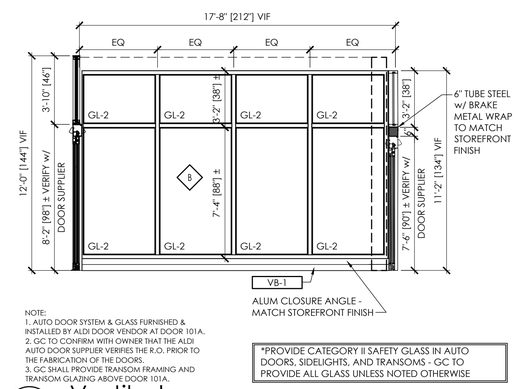

C1 Vestibule
SCALE: 1/4" = 1'-0"

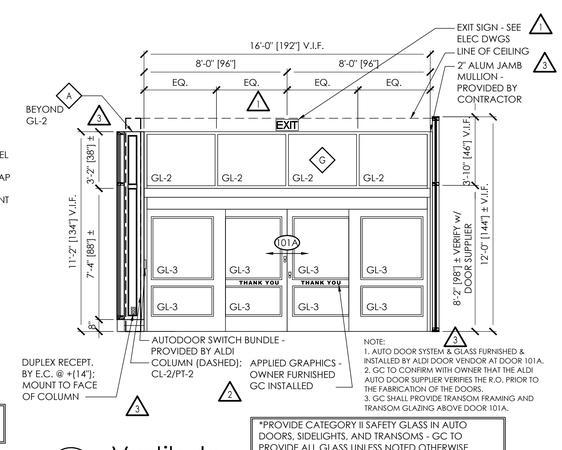

B1 Vestibule
SCALE: 1/4" = 1'-0"

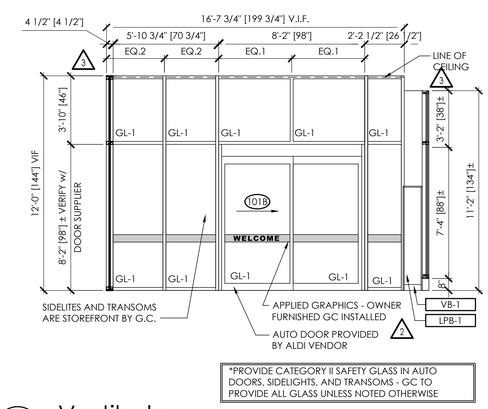

A1 Vestibule
SCALE: 1/4" = 1'-0"

PLOTTED: 7/29/2025 9:49 AM

APD ENGINEERING ARCHITECTURE
615 Fishers Run Victor, NY 14564
585.742.2222 - www.apd.com

Copyright © 2024
APD Engineering & Architecture
615 Fishers Run
Victor, NY 14564

Drawing Alteration

It is a violation of law for any person, unless acting under the direction of licensed Architect, Professional Engineer, Landscape Architect, or Land Surveyor to alter any item on this document in any way. Any licensee who alters this document is required by law to affix his or her seal and to add the notation "Altered By" followed by his or her signature and the specific description of the alteration or revision.

DO NOT SCALE PLANS

Copying, Printing, Software and other processes required to produce these prints can stretch or shrink the actual paper or layout. Therefore, scaling of this drawing may be inaccurate. Contact APD E&A with any need for additional dimensions or clarifications.

Issued:		Date:
A	Issued for Permit	07/08/24
B	Issued for Bid	07/29/25
C		
D		
E		

Revisions:		Date:
1	AHJ Responses	10/02/24
2	Owner Changes	11/18/24
3	Owner Changes	07/29/25
4		
5		
6		
7		
8		
9		
10		
11		
12		

PROJECT ARCHITECT/ENGINEER
Daniel Sargent

PROJECT LEAD
John Lynch

NOT FOR CONSTRUCTION

Seal Seal

ALDI Inc.
1171 North State Road 7
Royal Palm Beach, FL 33411
(561) 640-8000

ALDI Inc. Store #: 50
Coconut Crossing, FL 2
12850 Northlake Boulevard
Palm Beach Gardens, FL 33412
Palm Beach County
Project Name & Location:

Window Elevations & Details
Drawing Name:

Prototype: V7.08 LHRD
Project No. 22-0267A
Type: GROUND UP
Drawn By: JWL
Scale: As Noted
Drawing No. A-602

ROOM FINISH SCHEDULE:

ROOM NO.	ROOM NAME	FLOOR	BASE	GYP BD THICKNESS	SOUND ATTENUATION BATTS	LPB THICKNESS	TOP WALL LOWER	TOP WALL UPPER	LEFT WALL LOWER	LEFT WALL UPPER	BOTTOM WALL LOWER	BOTTOM WALL UPPER	RIGHT WALL LOWER	RIGHT WALL UPPER	CEILING MAT.	CEILING FIN.	CEILING HGT.	GYP BD PAINT SYSTEM	CL#	SURFACE	REMARKS	ROOM NO.
101	VESTIBULE	CONC	VB-1	1/2"		3/4"	AL/GL / LPB-1	AL/GL / GYP BD	AL/GL	AL/GL / GYP BD	AL/GL	AL/GL / GYP BD	AL/GL / LPB-1	AL/GL / GYP BD	SAPC-1	--	11'-11"	PT-6	CL-2	BELOW CEILING: GYP BD WALLS, SOFFITS, COLUMNS		101
102	SALES	POLCONC	VB-1/ SS-3/ CPB/ SSBR	1/2" & 1/2 MLD. (A)(C)		3/4"	LPB-1	GYP BD	AL/GL / T1 / LPB-1	GYP BD	AL/GL / LPB-1 / GYP BD	AL/GL / GYP BD	LPB-1 / GYP BD	T-4 / WP-1 / GYP BD	EXP	--	VARIES	PT-6	CL-1	COLUMNS ON THE SALES FLOOR, DECK, BAR JOISTS, GIRDER TRUSSES, CONDUIT, SPRINKLER LINES, UNISTRUT, HARD DUCT WORK (U.N.O.), METAL GRILLES, GYP BD ABOVE PAINT LINE & VMT - SEE DWGS (PT-2)	CAULK ALL PINHOLES PRIOR TO PRIME AND PAINT	102
																			CL-2	METAL GRILLES, SACKING COUNTER WALL ABOVE TILE, GYP BD WALLS BELOW PAINT LINE, SOFFITS, HARD DUCT WORK, AND VMT - SEE DWGS		
																			CL-5	CONCRETE PALLET BUMPER		
103	UNISEX 1	POLCONC	SS-7	1/2" MLD (B)	X		T-2	GYP BD	T-2	GYP BD	T-2	GYP BD	T-2	GYP BD	SAPC-1	--	9'-6"	PT-5	CL-7	GYP BD WALLS		103
104	HALL	POLCONC	VB-1	1/2"	X	3/4"	LPB-1	GYP BD	LPB-1	GYP BD	LPB-1	GYP BD	LPB-1	GYP BD	SAPC-1	--	9'-6"	PT-6	CL-2	GYP BD WALLS, SOFFITS		104
															GYP BD	--	9'-0"		CL-8	CEILING AT DRINKING FOUNTAINS		
105	UNISEX 2	POLCONC	SS-7	1/2" MLD (B)	X		T-2	GYP BD	T-2	GYP BD	T-2	GYP BD	T-2	GYP BD	SAPC-1	--	9'-6"	PT-5	CL-7	GYP BD WALLS		105
106	BREAKROOM	POLCONC	VB-1	1/2" MLD (C)	X		GYP BD	AL/GL / GYP BD	GYP BD		GYP BD	GYP BD / T-5	GYP BD		SAPC-1	--	9'-6"	PT-5	CL-7 & 11	GYP BD WALLS		106
107	OFFICE	POLCONC	VB-1	1/2" MLD (C)	X		GYP BD		GYP BD		GYP BD		GYP BD		SAPC-1	--	9'-6"	PT-5	CL-7	GYP BD WALLS		107
108	UTILITY AREA	CONC	-	1/2"			PLWD	GYP BD	PLWD	GYP BD	PLWD / FRP	PLWD / GYP BD	PLWD	GYP BD	EXP-1	--	VARIES	PT-5	CL-X	MATCH BACK ROOM	EXTEND FRP 4'-0" ABOVE MOP SINK ON BACK WALL. PLWD FULL HEIGHT BEHIND ROOF ACCESS LADDER - SEE C3/A213	108
109	BACK ROOM	CONC	CPB	1/2"			PLWD	GYP BD	PLWD	GYP BD	PLWD	GYP BD	PLWD	GYP BD	EXP-1	--	VARIES	PT-5	CL-4	EDGE OF OVERHEAD DOOR OPENING, TRACK GUARDS, WARNING STRIPES ON FLOOR (STRIPING TO BE 4" WIDE W/ 12" SPACING IN-BETWEEN)		109
																			CL-6	LOWER PLYWOOD WALLS, TRIM, CONCRETE PALLET BUMPER, COLUMNS,BRACED BAY STEEL,METAL GRILLES CMU (WHEN APPLICABLE) 2		
																			CL-8	UPPER GYP BD WALLS		
110	ECOMMERCE	POLCONC	VB-1	1/2" MLD. (C)	X	3/4"	LPB-1	GYP BD	LPB-1	GYP BD	LPB-1	GYP BD	LPB-1	GYP BD	EXP-1	--	VARIES	PT-6	CL-1	DECK, BAR JOISTS, GIRDER TRUSSES, CONDUIT, SPRINKLER LINES, UNISTRUT, HARD DUCT WORK (U.N.O.), METAL GRILLES, GYP BD ABOVE PAINT LINE		110
																			CL-2	WALLS ABOVE LPB, SOFFITS & HARD DUCT WORK		
111	CLOSET	POLCONC	VB-1	1/2"			GYP BD		GYP BD		GYP BD		GYP BD		SAPC-1	--	9'-6"	PT-5	CL-7	GYP BD WALLS		111

FINISH NOTES:

1. SEE REFLECTED CEILING PLAN FOR ALL CEILINGS AND SOFFITS.
2. REFER TO APPENDIX 'A' FOR ITEMS FURNISHED BY OWNER AND INSTALLED BY CONTRACTOR
3. REFER TO APPENDIX 'B' FOR ITEMS PROVIDED BY OWNER.
4. DO NOT PAINT GALVANIZED DOOR THRESHOLDS
5. USE SOLVENT TO REMOVE ALL MANUFACTURER WORDING ON EXPOSED PVC PIPING.
6. PAINT ALL EXPOSED PIPING TO MATCH ADJACENT CEILING/WALL COVERING.
7. SEE SPECIFICATION SECTION 099100 FOR PAINT SYSTEMS.
8. REFER TO PAINT FINISH SCHEDULES FOR TREATMENT AND COLOR OF WALL FINISHES.

GYP BD KEYNOTES:

A. MOLD (MLD) RESISTANT GYP BD TO EXTEND UP TO 2' ABOVE T.O. COOLER/FREEZER. MLD GYP BD TO BE INSTALLED UP TO 8' AFS AT ALL WALLS SURROUNDING MULTI-DECK UNITS AND ALONG ENTIRE LENGTH OF FIRST AISLE.

B. MOLD (MLD) RESISTANT GYP BD TO EXTEND TO CEILING ALL WALLS.

C. MOLD (MLD) RESISTANT GYP BD ON WALLS ADJACENT TO FREEZER. APPLY VAPOR BARRIER BETWEEN GYP BD AND STUDS. 2

SOUND ATTENUATION BATTS:

1. PROVIDE SOUND BATTS FOR FULL HEIGHT OF WALL ON ALL INTERIOR PARTITIONS SURROUNDING ROOMS WITH "X" IN SCHEDULE ABOVE

VAPOR BARRIER:

1. PROVIDE VAPOR BARRIER ON WALLS ADJACENT TO FREEZER BETWEEN STUD AND GYP ON FREEZER SIDE OF WALL

FINISH MATERIAL SCHEDULE :

MAT. KEY	KEY DESCRIPTION	MANUFACTURER	DESCRIPTION - COLOR	REMARKS
AL/GL	ALUMINUM & GLASS STOREFRONT		CLEAR ANODIZED	SEE A602 FOR GLAZING TYPES
CONC.	CONCRETE SLAB			SEE PROJECT MANUAL - SECTION 033000
EXP	EXPOSED STRUCTURE		SEE ROOM FINISH SCHEDULE	SALES FLOOR - GC TO ENSURE ALL JOIST AND JOIST GIRDER TAGS ARE PROPERLY SECURED TO JOIST WEBBING AND CONCEALED FROM VIEW PRIOR TO PAINTING.
EXP-1	EXPOSED STRUCTURE		NO PAINT	BACK ROOM/ABOVE CEILINGS
FRP	FIBER REINF PLASTIC		P-151 LIGHT GRAY	SEE PROJECT MANUAL - SECTION 066400
GR-1	GROUT	MAPEI	#5047 CHARCOAL	GROUT FOR T-2 AND T-3
GR-2	NOT USED			
GR-3	GROUT	MAPEI	#5220 EGGSHELL	GROUT FOR T-4, T-5
GR-4	NOT USED			
GR-5	GROUT	MAPEI	#5004 BAHAMA BEIGE	GROUT FOR T-1
GYP BD	GYPSUM WALL BOARD			SEE PROJECT MANUAL - SECTION 092900
LPB-1	LAMINATED PARTICLE BOARD - WAINSCOT	FORMICA	#5883-58 PECAN WOODLINE	COORDINATE w/ MILLWORK VENDOR TO BE INSTALLED 1/2" AFS - REFER TO APPENDIX A.
LPB-2	LAMINATED PARTICLE BOARD - SACKING COUNTER, WINDOW SILLS AND CABINETRY, BREAK ROOM HIGH TOP COUNTER	FORMICA	#5884-58 CHESTNUT WOODLINE	COORDINATE w/ MILLWORK VENDOR. REFER TO APPENDIX A.
LPB-3	LAMINATED PARTICLE BOARD - COUNTERTOPS OFFICE	FORMICA	#961-58 FOG	COORDINATE w/ MILLWORK VENDOR. REFER TO APPENDIX A.
LPB-4	NOT USED			
LPB-5	LAMINATED PARTICLE BOARD - COOLER AND FREEZER VALANCES	FORMICA	#2297-58 TERRILL	COORDINATE w/ MILLWORK VENDOR. REFER TO APPENDIX A.
POLCONC	CONCRETE SLAB		GROUND AND POLISHED	COORDINATE W/ POLISHING VENDOR. REFER TO APPENDIX B.
PLWD	PLYWOOD - PAINTED		PT-7 / CL-6; SEMIGLOSS	BACK ROOM; SEE PROJECT MANUAL - SECTION 061053 (RUN PLWD VERTICAL)
SAPC-1	SUSPENDED ACOUSTIC PANEL CEILING		WHITE	SEE PROJECT MANUAL - SECTION 095113
SS-1	SCHLUTER STRIP - SACKING COUNTER TILE	SCHLUTER	SCHIENE; AE 100; SATIN ANODIZED ALUMINUM FINISH	THIN SET PORCELAIN WALL TILE EDGE - SIZE TO FIT TILE; INCLUDE ALL SPECIAL CORNER AND TRIM SHAPES (GC FURNISH AND INSTALL)
SS-2	SCHLUTER STRIP - RESTROOM WALL	SCHLUTER	RONDEC; DB 14 AE; SATIN ANODIZED ALUMINUM FINISH	WALL TILE EDGE - SIZE TO FIT TILE; INCLUDE ALL SPECIAL CORNER AND TRIM SHAPES (GC FURNISH AND INSTALL)
SS-3	SCHLUTER STRIP - SACKING COUNTER BASE	SCHLUTER	DILEX-AHKA; AHKA 100 AE; SATIN ANODIZED ALUMINUM FINISH	WALL TILE BASE - SIZE TO FIT TILE; INCLUDE ALL SPECIAL CORNER AND TRIM SHAPES; INSTALL FLANGE ON VERTICAL SURFACE (GC FURNISH AND INSTALL)
SS-4	SCHLUTER STRIP - SACKING COUNTER TILE	SCHLUTER	QUADEC; Q100 AE; SATIN ANODIZED ALUMINUM FINISH	THIN SET PORCELAIN TILE CORNERS - SIZE TO FIT TILE; INCLUDE ALL SPECIAL CORNER AND TRIM SHAPES (GC FURNISH AND INSTALL)
SS-5	NOT USED			
SS-6	NOT USED			
SS-7	SCHLUTER STRIP - RESTROOM WALL BASE	SCHLUTER	DILEX-AHKA; AHKA 80 AE; SATIN ANODIZED ALUMINUM FINISH	WALL TILE BASE - SIZE TO FIT TILE; INCLUDE ALL SPECIAL CORNER AND TRIM SHAPES; INSTALL FLANGE ON VERTICAL SURFACE (GC FURNISH AND INSTALL)
SSM-1	SOLID SURFACE MATERIAL - COUNTER BREAKROOM	WILSONART	#9175 ML(3) AVALANCHE MELANGE	COORDINATE w/ MILLWORK VENDOR. REFER TO APPENDIX A.
T-1	GLAZED TILE	DALTILE	WILLOW BEND - DARK BROWN WB03, 6"X24" (⅓ BOND)	SACKING COUNTER ACCENT TILE; (GC FURNISH AND INSTALL) GROUT: GR-5
T-2	PORCELAIN TILE	DALTILE	DB PORTFOLIO PORC - 12"X24" PF05 ASH GRAY STD (RUNNING BOND)	RESTROOM WALL TILE; (GC FURNISH AND INSTALL); GROUT: GR-1
T-3	PORCELAIN TILE	DALTILE	DB PORTFOLIO PORC - 12"X24" PF05 ASH GRAY STD (1/3 RUNNING BOND)	ANCILLARY FLOOR TILE; (GC FURNISH AND INSTALL); GROUT: GR-1
T-4	GLAZED TILE	DALTILE	RITTENHOUSE SQUARE - WHITE 0100 SEMI-GLOSS, 3"X6" (RUNNING BOND)	SALES FLOOR REAR WALL ACCENT TILE; (GC FURNISH AND INSTALL); GROUT: GR-3
T-5	PORCELAIN TILE	DALTILE	RITTENHOUSE SQUARE - ARCTIC WHITE MATTE, 3"X6" (RUNNING BOND)	BREAKROOM BACKSPLASH TILE; (GC FURNISH AND INSTALL) GROUT: GR-5
VB-1	VINYL BASE	ROPPE	193 BLACK /BROWN	SEE PROJECT MANUAL - SECTION 096513
WP-1	WOOD PANEL	ARCH SYSTEMS	INTERPLAIT ECO-PANELS - WPVEP141	FOR NATIONAL ACCOUNT ORDERING, CONTACT RACHEL COOPER OF ARCH SYSTEMS VIA PHONE: 646-460-8222 OR EMAIL: RCOOPER@ARCHSYSTEMS.COM AND CC MRAMPELLI@ARCHSYSTEMS.COM
		ALTERNATE: SKYLINE FLOORSCAPES	ALTERNATE: SFS-W-0024	FOR NATIONAL ACCOUNT ORDERING, CONTACT BLAKE CHAFFEE OF SKYLINE FLOORSCAPES VIA PHONE 512-782-8484 OR EMAIL BLAKEC@SKYLINEFLOORSCAPES.COM

WALL AND SURFACE PROTECTION SCHEDULE :

MAT. KEY	KEY DESCRIPTION	MANUFACTURER	DESCRIPTION - COLOR	REMARKS
BG	BUMPER GUARD	McCUE	STAINLESS STEEL	SEE PROJECT MANUAL - SECTION 102600
BR	BUMPER RAIL	McCUE	CART STOP SSR	SEE PROJECT MANUAL - SECTION 102600
BR-C	BUMPER RAIL	McCUE	CART STOP UG150 12'H. - 101 (GREY)	SEE PROJECT MANUAL - SECTION 102600
CG-A	CORNER GUARD 2		CLEAR ANODIZED ALUMINUM	SEE PROJECT MANUAL - VOL. 3, APPENDIX A, SECTION 064023 REFER TO CG-A SCHEDULE FOR SIZE AND LOCATION
CG-ST	CORNER GUARD		STEEL - PT-3 / CL-6: SEMIGLOSS	SEE PROJECT MANUAL - SECTION 055000 2
CPB	CONC. PALLET BUMPER		PT-3 / CL-6: SEMIGLOSS(BACK ROOM, COOLER, FREEZER) PT-3 / CL-5: SEMIGLOSS(SALES)	SEE DETAIL B1/A511 FOR ASSEMBLY SEE DETAIL 7/A601 FOR COLOR BREAK
CRTB	CART BUMPER		CONC NATURAL - RUBBED FINISH	SEE DETAIL D1/S301
KP	KICK PLATE		STAINLESS STEEL	SEE PROJECT MANUAL - VOL. 3, APPENDIX A, SECTION 087100
SSBR	STAINLESS STEEL BUMPER RAIL	TARPENING - LAFOLLETTE CO	STAINLESS STEEL	

BOLLARD SCHEDULE :

MAT. KEY	KEY DESCRIPTION	MANUFACTURER	DESCRIPTION - COLOR	REMARK
BLRD-1	NOT USED 2			
BLRD-2	10" Ø BOLLARD		STEEL PIPE FILLED w/ GROUT - PT-19 / CL-4: SEMIGLOSS	@ LOADING DOCK - SEE STRUCTURAL DWG.
BLRD-3	3" Ø BOLLARD		GALV STEEL PIPE POST	@ CART CORRAL - CENTER WITHIN ROWS. ATTACH OWNER PROVIDED STARTER CHAINS FOR CART SYSTEM - COORD LAYOUT WITH ALDI CONSTRUCTION REPRESENTATIVE; SEE PROJECT MANUAL - SECTION 055000
BLRD-4	6" Ø STEEL PIPE BOLLARD W/ COVER	McCUE CORPORATION	SLOPED PLASTIC COVER CSPC-65-54-155	SLOPED SIDE OF COVER TO FACE AWAY FROM BUILDING. FOR ORDERING, CONTACT JOHN ROMANO, 574-532-0221, ROMKTG@AOL.COM

EQUIPMENT AND ACCESSORY SCHEDULE :

MAT. KEY	KEY DESCRIPTION	MANUFACTURER	DESCRIPTION - COLOR	REMARK
AC-X	TOILET ROOM ACC.	BY CONTRACTOR		SEE PROJECT MANUAL - SECTION 102800
MDU	MULTIDECK UNITS W/INTEGRAL FASCIA	HUSSMAN	1	BY OWNER
TR-1	TRASH RECEPTACLE	DAWN ENTERPRISES	MODEL # RP40S-ALDI - FACTORY FINISH	FOR ORDERING, CONTACT DAWN ENTERPRISES VIA PHONE: 800-262-3296 OR EMAIL: brenda@godawn.com
R-1	REFRIGERATOR	FRIGIDAIRE		OWNER SUPPLIED CONTRACTOR INSTALLED
MW-1	MICROWAVE OVEN	WHIRLPOOL	1	OWNER SUPPLIED CONTRACTOR INSTALLED
DW-1	DISHWASHER	FRIGIDAIRE		OWNER SUPPLIED CONTRACTOR INSTALLED 2
R-2	REFRIGERATOR	TRUE		OWNER SUPPLIED CONTRACTOR INSTALLED
F-1	FREEZER	TRUE		OWNER SUPPLIED CONTRACTOR INSTALLED

CG-A SCHEDULE (U.N.O.) :

TYPE	SIZE	REMARKS
INSIDE CORNERS	1" x 1" x 1/16" x 80" LENGTHS	INSTALL AT LPB ONLY. OWNER FURNISHED CONTRACTOR INSTALLED
OUTSIDE CORNERS	2" x 2" x 1/16" x 80" LENGTHS	INSTALL AT LPB ONLY. OWNER FURNISHED CONTRACTOR INSTALLED
J CHANNEL	3/4" x 96" LENGTHS	INSTALLED AT ALL LPB EDGES. LONG LEG ON THE BACK SIDE OF LPB AND SHORT LEG LEFT EXPOSED. OWNER FURNISHED CONTRACTOR INSTALLED
ANGLE	FRY REGLET JDM-50	INSTALLED AT BOTTOM OF GYP. BD. ABOVE COOLER AND FREEZER DOORS. CONTRACTOR PROVIDED

INTERIOR MTL. STUD SCHEDULE (U.N.O.) :

3 5/8" STUD DESIGNATION	MAXIMUM HEIGHT	6" STUD DESIGNATION	MAXIMUM HEIGHT
362S125-30 @ 16" O.C. (20 GAUGE)	16'-1"	600S125-30 @ 16" O.C. (20 GAUGE)	23'-0"
362S125-43 @ 16" O.C. (18 GAUGE)	17'-5"	600S125-43 @ 16" O.C. (18 GAUGE)	26'-2"
362S125-54 @ 16" O.C. (16 GAUGE)	18'-8"	600S125-54 @ 16" O.C. (16 GAUGE)	28'-0"

NOTES

STUD DEPTH INDICATED ON DRAWINGS

STUDS PER THIS TABLE REQUIRE SHEATHING BOTH SIDES OF STUD AND/OR BRIDGING AT 4'-0" O.C.

STRUCTURAL DRAWINGS & PROJECT SPECIFIC LIGHT GAUGE SHOP DRAWINGS SUPERSEDE THIS TABLE

PROVIDE DOUBLE KING STUDS ON BOTH SIDES OF OPENING.

THIS TABLE IS FOR GENERAL REFERENCE ONLY. STUD MANUFACTURER'S SPAN TABLES SHOULD SUPERSEDE THIS TABLE BASED ON STUD DESIGNATION SELECTED AND SPAN REQUIREMENTS.

PAINT COLOR SCHEDULE :

MAT. KEY	KEY DESCRIPTION	MANUFACTURER	DESCRIPTION - COLOR	REMARKS
CL-1	PAINT COLOR	SHERWIN WILLIAMS	#7510 CHATEAU BROWN	
CL-2	PAINT COLOR	SHERWIN WILLIAMS	#6071 POPULAR GRAY	
CL-3	PAINT COLOR	SHERWIN WILLIAMS	#6073 PERFECT GREIGE	USED ABOVE PAINT BREAK LINE ONLY WITH SUSPENDED CEILING
CL-4	PAINT COLOR	SHERWIN WILLIAMS	SAFETY YELLOW	
CL-5	PAINT COLOR	SHERWIN WILLIAMS	#7504 KEYSTONE GRAY	
CL-6	PAINT COLOR	SHERWIN WILLIAMS	#7073 NETWORK GRAY	
CL-7	PAINT COLOR	SHERWIN WILLIAMS	#7015 REPOSE GRAY	
CL-8	PAINT COLOR	SHERWIN WILLIAMS	#7757 HIGH RECTIFIVE WHITE	
CL-9	PAINT COLOR	SHERWIN WILLIAMS 1	#6089 GROUNDED (197-C6)	
CL-10	NOT USED			
CL-11	PAINT COLOR	SHERWIN WILLIAMS	#6499 STREAM	
PT-X	PAINT SYSTEM	BY CONTRACTOR		SEE PAINT SYSTEM SCHEDULE ON THIS SHEET. REFER TO SPEC SECTION 099100 FOR PRODUCT REQUIREMENTS.

INTERIOR PAINT SYSTEM SCHEDULE

PT #	SYSTEM	SUBSTRATE	SYSTEM
PT-1	LATEX SEMI-GLOSS	CONCRETE BLOCK	1C. PRIMER B25W25 1C. B31-2600 1C. B31-2600
PT-2	DRY-FALL (RETROFIT/ RENOVATION/ REFRESH STORES)	EXPOSED STEEL, WOOD, DUCTS, CONDUIT & SCRIM.	1C. PRIMER B66-1560 1C. B66-1560
PT-2	DRY-FALL (NEW CONSTRUCTION STORES)	EXPOSED STEEL, WOOD, DUCTS, CONDUIT & SCRIM	STEEL DECKS: 1C. PRIMER B66-310 1C. B42W181 GALVANIZED DECKS: 1C. PRIMER B42W181 1C. B42W181
PT-3	LATEX SEMI-GLOSS	STEEL & CONC.	1C. PRIMER B66-310 1C. B66-650 1C. B66-650
PT-4	LATEX SEMI-GLOSS	GALVANIZED METAL GRILLES	1C. PRIMER B66-310 1C. B66-650 1C. B66-650
PT-5	LATEX EGGSHELL	GYPSUM BOARD	1C. PRIMER B28W2600 1C. B20-2600 1C. B20-2600
PT-6	LATEX FLAT	GYPSUM BOARD	1C. PRIMER B28W2600 1C. B30-2600 1C. B30-2600
PT-7	LATEX SEMI-GLOSS	PLYWOOD AND TRIM	1C. PRIMER B28W8111 1C. B31 1C. B31
PT-8	WATER-BORNE URETHANE	STEEL	1C. PRIMER 646-100 1C. B65-720 1C. B65-720
PT-9	WATER-BORNE EPOXY /URETHANE	CONCRETE	1C. PRIMER 3460 WBE 1C. 3460 WBE/5150-15 1C. 4408
PT-10	WATER-BORNE EPOXY	CONCRETE	1C. PRIMER 8100 1C. 8100 1C. 8100

EXTERIOR PAINT SYSTEM SCHEDULE

PT #	SYSTEM	SUBSTRATE	SYSTEM
PT-15	LATEX SATIN	CAST CONCRETE	1C. PRIMER A24W8300 1C. K62-650 1C. K62-650
PT-16	URETHANE GLOSS	CONCRETE BLOCK	1C. PRIMER A2W200 1C. 646-100 1C. B65-720 2
PT-17	LATEX SATIN	EXISTING EIFS /STUCCO	1C. PRIMER B28W2600 1C. B20-2600 1C. B20-2600
PT-18	LATEX SATIN	P.T. WOOD	1C. PRIMER B24W804 1C. K43 1C. K43
PT-19	LATEX GLOSS	STEEL	1C. PRIMER 646-100 1C. B65-720 1C. B65-720
PT-20	LATEX OVER ALKALI-RESISTANT PRIMER SYSTEM	CMU	1C. PRIMER A24W200 1C. K43 1C. K43

PAINT NOTES:

1. PAINT COLORS MUST BE PROVIDED BY MANUFACTURER INDICATED; NO SUBSTITUTIONS WILL BE ACCEPTED FOR COLOR.
2. ALL PAINTS ARE FROM SHERWIN-WILLIAMS NATIONAL ACCT. CONTACT: TODD MCMARTIN 630-617-1714 / TODD.R.MCMARTIN@SHERWIN.COM

THERMAL INSULATION SCHEDULE

LOCATION	MIN. R VALUE	INSULATION TYPE	DESIGN STANDARD	REMARKS
UNDER SLABS	5 PER INCH TOTAL: 30	TYPE IV EXTRUDED-POLYSTYRENE BOARD INSULATION		PROVIDE UNDER FREEZER SLAB 2
CONCEALED BUILDING INSULATION	7.4 PER INCH TOTAL: 28	CLOSED-CELL SPRAY POLYURETHANE FOAM	ICYNENE HF0200	PROVIDE AT PERIMETER WALL STUDS AS SHOWN ON DRAWINGS - THERMAL BARRIER OF EITHER FULL HEIGHT 1/2" GYP. BD. OR INTUMESCENT COATING REQUIRED; SEE SPECIFICATIONS - 072100.2.8.A.2; GC TO PROVIDE BASED ON COST ANALYSIS
METAL STUDS & GYP BD PARTITIONS	N/A	SOUND ATTENUATION BLANKETS		PROVIDE PER ROOM FINISH SCHEDULE
CONCEALED SPACES	3.7 PER INCH	OPEN-CELL SPRAY POLYURETHANE FOAM	ICYNENE CLASSIC (LD-C-50)	
ROOF INSULATION	5.71 PER INCH TOTAL: 24	POLYISOCYANURATE BOARD INSULATION	CLOSE-CELL FOAM CORE FIBER-REINFORCED ORGANIC FELT FACERS	CONFIRM REQUIRED INSULATION THICKNESS TO OBTAIN DESIGN R-VALUE WITH MANUFACTURER

INSULATION NOTES:

1. MINIMUM 'R' VALUE BASED ON (LTTR) LONG TERM THERMAL RESISTANCE VALUE PER ASTM C1289.

APD ENGINEERING ARCHITECTURE
615 Fishers Run Victor, NY 14564
585.742.2222 - www.apd.com

Copyright © 2024
APD Engineering & Architecture
615 Fishers Run
Victor, NY 14564

Drawing Alteration

It is a violation of law for any person, unless acting under the direction of licensed Architect, Professional Engineer, Landscape Architect, or Land Surveyor to alter any item on this document in any way. Any licensee who alters this document is required by law to affix his or her seal and to add the notation "Altered By" followed by his or her signature and the specific description of the alteration or revision.

DO NOT SCALE PLANS

Copying, Printing, Software and other processes required to produce these prints can stretch or shrink the actual paper or layout. Therefore, scaling of this drawing may be inaccurate. Contact APD E&A with any need for additional dimensions or clarifications.

Issued:		Date:
A	Issued for Permit	07/08/24
B	Issued for Bid	07/29/25
C		
D		
E		

Revisions:		Date:
1	Owner Changes	11/18/24
2	Owner Changes	07/29/25
3		
4		
5		
6		
7		
8		
9		
10		
11		
12		

PROJECT ARCHITECT/ENGINEER
Daniel Sargent

PROJECT LEAD
John Lynch

NOT FOR CONSTRUCTION

Seal | Seal

ALDI Inc.
1171 North State Road 7
Royal Palm Beach, FL 33411
(561) 640-8000

ALDI Inc. Store #: 50
Coconut Crossing, FL 1
12850 Northlake Boulevard
Palm Beach Gardens, FL 33412
Palm Beach County

Project Name & Location:

Finish Schedules & Notes

Drawing Name:

Prototype: V7.08 LHRD
Type: GROUND UP
Drawn By: JWL
Scale: As Noted

Project No. 22-0267A

Drawing No. A-603

PLOTTED: 7/29/2025 9:49 AM